SHARP SERVICE MANUAL

S55J2LC13B8US

LCD COLOR TELEVISION

MODELS LC-13B8U-S LC-15B8U-S LC-15B9U-SM

In the interests of user-safety (Required by safety regulations in some countries) the set should be restored to its original condition and only parts identical to those specified should be used.

CONTENTS

Page

- IMPORTANT SERVICE SAFETY PRECAUTION 2
- SPECIFICATIONS 5
- OPERATION MANUAL 6
- DIMENSIONS 8
- REMOVING OF MAJOR PARTS 9
- ADJUSTING PROCEDURE OF EACH SECTION 13
- PUBLIC MODE SETTING PROCEDURE 22
- TROUBLE SHOOTING TABLE 27
- MAJOR IC INFORMATION 32
- BLOCK DIAGRAM 40
- OVERALL WIRING DIAGRAM 42
- DESCRIPTION OF SCHEMATIC DIAGRAM 44
- SCHEMATIC DIAGRAM
  - ■R/C, LED Unit 45
  - ■MAIN Unit 46
  - ■SUB Unit 60
- PRINTED WIRING BOARD ASSEMBLIES 78
- REPLACEMENT PARTS LIST 95
- PACKING OF THE SET 109

SHARP CORPORATION

This document has been published to be used for after sales service only.
The contents are subject to change without notice.

Downloaded from www.Manualslib.com manuals search engine

IMPORTANT SERVICE SAFETY PRECAUTION

■ **Service work should be performed only by qualified service technicians who are thoroughly familiar with all safety checks and the servicing guidelines which follow:**

WARNING

1. For continued safety, no modification of any circuit should be attempted.
2. Disconnect AC power before servicing.

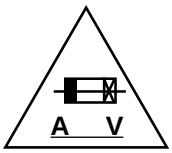

CAUTION: FOR CONTINUED PROTECTION AGAINST A RISK OF FIRE REPLACE ONLY WITH SAME TYPE F6700 (1.6A, 250V), F6702 (1.6A, 250V), F7701 (3.15A, 250V) AND F7702 (3.15A, 250V) FUSE.

BEFORE RETURNING THE RECEIVER (Fire & Shock Hazard)

Before returning the receiver to the user, perform the following safety checks:

1. Inspect all lead dress to make certain that leads are not pinched, and check that hardware is not lodged between the chassis and other metal parts in the receiver.
2. Inspect all protective devices such as non-metallic control knobs, insulation materials, cabinet backs, adjustment and compartment covers or shields, isolation resistor-capacitor networks, mechanical insulators, etc.
3. To be sure that no shock hazard exists, check for leakage current in the following manner.

- Plug the AC cord directly into a 110~240 volt AC outlet, and connect the DC power cable into the receiver's DC jack. (Do not use an isolation transformer for this test).
- Using two clip leads, connect a 1.5k ohm, 10 watt resistor paralleled by a 0.15µF capacitor in series with all exposed metal cabinet parts and a known earth ground, such as electrical conduit or electrical ground connected to an earth ground.
- Use an AC voltmeter having with 5000 ohm per volt, or higher, sensitivity or measure the AC voltage drop across the resistor.
- Connect the resistor connection to all exposed metal parts having a return to the chassis (antenna, metal cabinet, screw heads, knobs and control shafts, escutcheon, etc.) and measure the AC voltage drop across the resistor.
  All checks must be repeated with the AC cord plug connection reversed. (If necessary, a nonpolarized adaptor plug must be used only for the purpose of completing these checks.)
  Any reading of 0.75V peak (this corresponds to 0.5 mA. peak AC.) or more is excessive and indicates a potential shock hazard which must be corrected before returning the monitor to the owner.

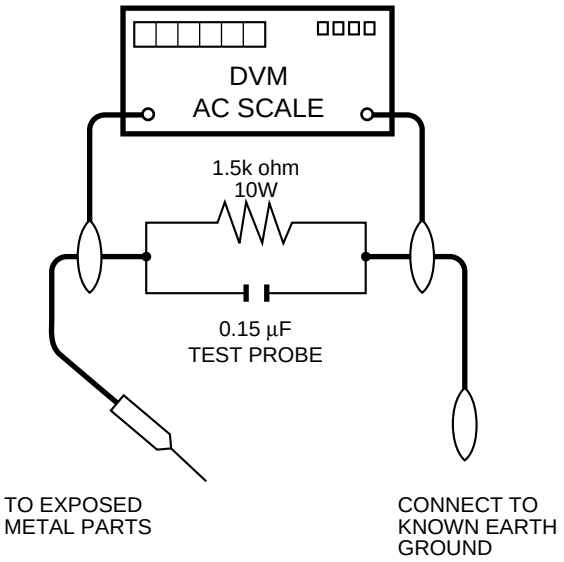

SAFETY NOTICE

Many electrical and mechanical parts in LCD television have special safety-related characteristics.
These characteristics are often not evident from visual inspection, nor can protection afforded by them be necessarily increased by using replacement components rated for higher voltage, wattage, etc.
Replacement parts which have these special safety characteristics are identified in this manual; electrical components having such features are identified by " ⚠ " and shaded areas in the ***Replacement Parts Lists*** and ***Schematic Diagrams***.
For continued protection, replacement parts must be identical to those used in the original circuit.
The use of a substitute replacement parts which do not have the same safety characteristics as the factory recommended replacement parts shown in this service manual, may create shock, fire or other hazards.

Downloaded from www.Manualslib.com manuals search engine

PRECAUTIONS A PRENDRE LORS DE LA REPARATION

■ **Ne peut effectuer la réparation qu' un technicien spécialisé qui s'est parfaitement accoutumé à toute vérification de sécurité et aux conseils suivants.**

AVERTISSEMENT

1. N'entreprendre aucune modification de tout circuit. C'est dangereux.
2. Débrancher le récepteur avant toute réparation.

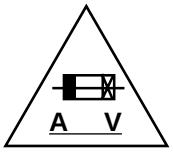

PRECAUTION: POUR LA PROTECTION CONTINUE CONTRE LES RISQUES D'INCENDIE, REMPLACER LE FUSIBLE PAR UN FUSIBLE DE MEME TYPE F6700 (1.6A, 250V), F6702 (1.6A, 250V), F7701 (3.15A, 250V), F7702 (3.15A, 250V).

VERIFICATIONS CONTRE L'INCEN-DIE ET LE CHOC ELECTRIQUE

Avant de rendre le récepteur à l'utilisateur, effectuer les vérifications suivantes.

1. Inspecter tous les faisceaux de câbles pour s'assurer que les fils ne soient pas pincés ou qu'un outil ne soit pas placé entre le châssis et les autres pièces métalliques du récepteur.
2. Inspecter tous les dispositifs de protection comme les boutons de commande non-métalliques, les isolants, le dos du coffret, les couvercles ou blindages de réglage et de compartiment, les réseaux de résistance-capacité, les isolateurs mécaniques, etc.
3. S'assurer qu'il n'y ait pas de danger d'électrocution en vérifiant la fuite de courant, de la facon suivante:

- Brancher le cordon d'alimentation directem-ent à une prise de courant de 110-240V. (Ne pas utiliser de transformateur d'isolation pour cet essai).
- A l'aide de deux fils à pinces, brancher une résistance de 1.5kΩ 10 watts en parallèle avec un condensateur de 0.15µF en série avec toutes les pièces métalliques exposées du coffret et une terre connue comme une conduite électrique ou une prise de terre branchée à la terre.
- Utiliser un voltmètre CA d'une sensibilité d'au moins 5000Ω/V pour mesurer la chute de tension en travers de la résistance.
- Toucher avec la sonde d'essai les pièces métalliques exposées qui présentent une voie de retour au châssis (antenne, coffret métallique, tête des vis, arbres de commande et des boutons, écusson, etc.) et mesurer la chute de tension CA en-travers de la résistance. Toutes les vérifications doivent être refaites après avoir inversé la fiche du cordon d'alimentation. (Si nécessaire, une prise d'adpatation non polarisée peut être utilisée dans le but de terminer ces vérifications.)
  Tous les courants mesurés ne doivent pas dépasser 0.5 mA.
  Dans le cas contraire, il y a une possibilité de choc électrique qui doit être supprimée avant de rendre le récepteur au client.

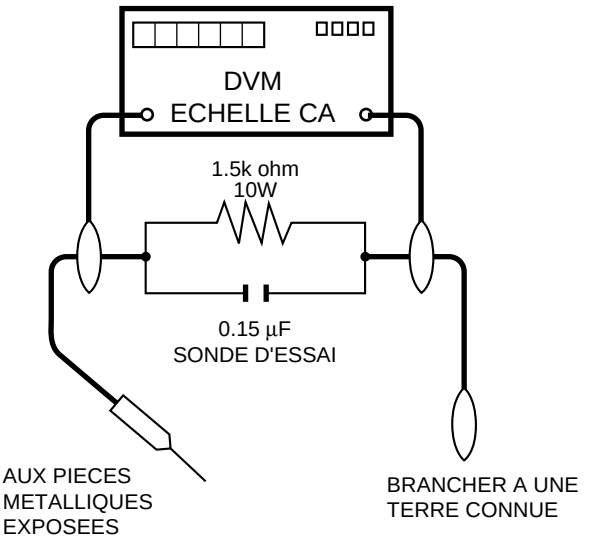

AVIS POUR LA SECURITE

De nombreuses pièces, électriques et mécaniques, dans les téléviseurs présentent des caractéristiques spéciales relatives à la sécurité, qui ne sont souvent pas évidentes à vue. Le degré de protection ne peut pas être nécessairement augmentée en utilisant des pièces de remplacement étalonnées pour haute tension, puissance, etc.
Les pièces de remplacement qui présentent ces caractéristiques sont identifiées dans ce manuel; les pièces électriques qui présentent ces particularités sont identifiées par la marque " ⚠ " et hachurées dans la liste des pièces de remplacement et les diagrammes schématiques.
Pour assurer la protection, ces pièces doivent être identiques à celles utilisées dans le circuit d'origine. L'utilisation de pièces qui n'ont pas les mêmes caractéristiques que les pièces recommandées par l'usine, indiquées dans ce manuel, peut provoquer des électrocutions, incendies, radiations X ou autres accidents.

Downloaded from www.Manualslib.com manuals search engine

Precautions for using lead-free solder

1 Employing lead-free solder

"All PWBs" of this model employs lead-free solder. The LF symbol indicates lead-free solder, and is attached on the PWBs and service manuals. The alphabetical character following LF shows the type of lead-free solder.
Example:

LFa

Sn-Ag-Cu Indicates lead-free solder of tin, silver and copper.

2 Using lead-free wire solder

When fixing the PWB soldered with the lead-free solder, apply lead-free wire solder. Repairing with conventional lead wire solder may cause damage or accident due to cracks.
As the melting point of lead-free solder (Sn-Ag-Cu) is higher than the lead wire solder by 40°C, we recommend you to use a dedicated soldering bit, if you are not familiar with how to obtain lead-free wire solder or soldering bit, contact our service station or service branch in your area.

3 Soldering

As the melting point of lead-free solder (Sn-Ag-Cu) is about 220°C which is higher than the conventional lead solder by 40°C, and as it has poor solder wettability, you may be apt to keep the soldering bit in contact with the PWB for extended period of time. However, Since the land may be peeled off or the maximum heat-resistance temperature of parts may be exceeded, remove the bit from the PWB as soon as you confirm the steady soldering condition.
Lead-free solder contains more tin, and the end of the soldering bit may be easily corroded. Make sure to turn on and off the power of the bit as required.
If a different type of solder stays on the tip of the soldering bit, it is alloyed with lead-free solder. Clean the bit after every use of it.
When the tip of the soldering bit is blackened during use, file it with steel wool or fine sandpaper.

Be careful when replacing parts with polarity indication on the PWB silk.

Lead-free wire solder for servicing

Part No.	★	Description	Code
ZHNDAi123250E	J	ϕ0.3mm 250g(1roll)	BL
ZHNDAi126500E	J	ϕ0.6mm 500g(1roll)	BK
ZHNDAi12801KE	J	ϕ1.0mm 1kg(1roll)	BM

Downloaded from www.Manualslib.com manuals search engine

SPECIFICATIONS

Items / Model		LC-13B8U	LC-15B8U, LC15B9U
LCD panel		13" Advanced Super View & BLACK TFT LCD	15" Advanced Super View & BLACK TFT LCD
Number of dots		921,600 dots VGA	
Video color systems		N358, N443, PAL, PAL-M, PAL-N, SECAM, PAL-60	
TV function	TV Standard (CCIR)	NTSC/PAL-M/PAL-N	
	TV Tuning System	PLL 181 ch.	
	STEREO	MTS+SAP	
	CATV	125 ch.	
Y/C FILTER		3-LINE COMB FILTER	
Brightness		430 cd/m^2	
Viewing angles		H: 170° V: 170°	
Audio amplifier		2.1 W × 2	
Speakers		1 $^{37}/_{64}$ × 2 $^{3}/_{4}$ in. (4 × 7 cm), 2 pcs.	
Terminals	INPUT1	AUDIO-IN, COMPONENT-IN	
	INPUT2	AUDIO-IN, VIDEO-IN, S-VIDEO-IN	
	INPUT3/OUTPUT	AUDIO-IN, VIDEO-IN/AUDIO-OUT, VIDEO-OUT	
	Antenna	F-Type	
	Headphone	Mini-jack for stereo (ø3.5 mm)	
OSD language		English/Spanish/French	
Power supply		AC 110-240V, 50/60Hz	
Power consumption		47 W (0.5 W standby): AC 120V	54 W (0.5 W standby): AC 120V
Weight	Display only	8.2 lbs./3.7 kg	9.0 lbs./4.1 kg
	With Display and stand	9.5 lbs./4.3 kg	10.6 lbs./4.8 kg

■ As a part of policy of continuous improvement, SHARP reserves the right to make design and specification changes for the LCD TV set improvement without prior notice. The performance specification figures indicated are nominal values of production units. There may be some deviations from these values in individual units.

Downloaded from www.Manualslib.com manuals search engine

OPERATION MANUAL

Part Names of the Main Unit

Controls

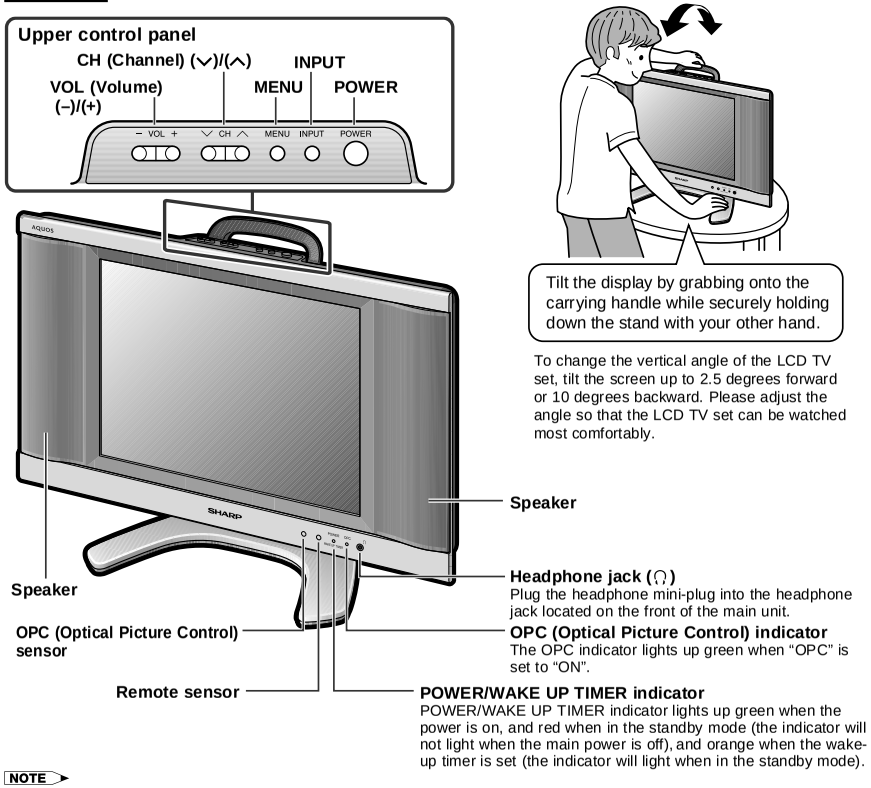

■ How to adjust the angle

To change the vertical angle of the LCD TV set, tilt the screen up to 2.5 degrees forward or 10 degrees backward. Please adjust the angle so that the LCD TV set can be watched most comfortably.

NOTE

- **INPUT**, **CH (∨)/(∧)**, **VOL (–)/(+)** and **MENU** on the main unit have the same functions as the same buttons on the remote control. Fundamentally, this operation manual provides a description based on operation using the remote control.

Listening with Headphones

■ Plug the headphone mini-plug into the headphone jack located on the front of the main unit.

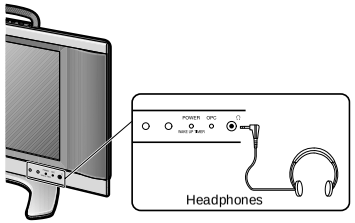

▼ **On-screen display**

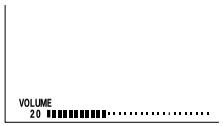

Adjust the sound volume using **VOL (+)/(–)** on the remote control.

NOTE

- Headphones are not included in the supplied accessories.
- No sound is heard from the main unit speakers when a headphone mini-plug is connected into the headphone jack.
- Do not set the volume at a high level. Hearing experts advise against extended listening at high volume levels.

Terminals

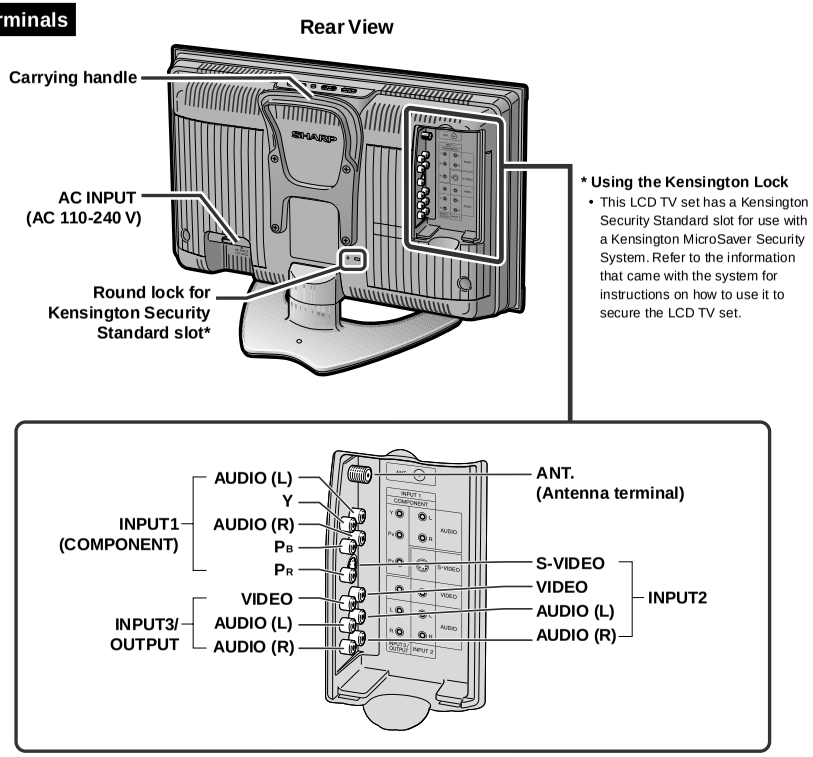

How to Fix the Cables:LC-13B8U

• Secure cables and cords with the supplied cable clamp so that they do not get caught when mounting the cover.

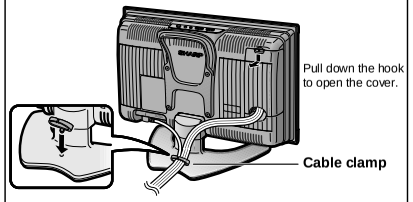

How to Fix the Cables:LC-15B8U/B9U

• Secure cables and cords with the supplied cable clamp so that they do not get caught when mounting the cover.

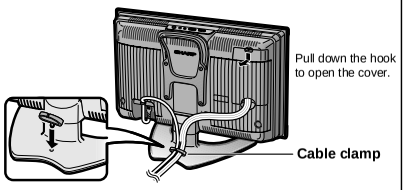

Downloaded from www.Manualslib.com manuals search engine

Downloaded from www.Manualslib.com manuals search engine

Part Names of the Remote Control

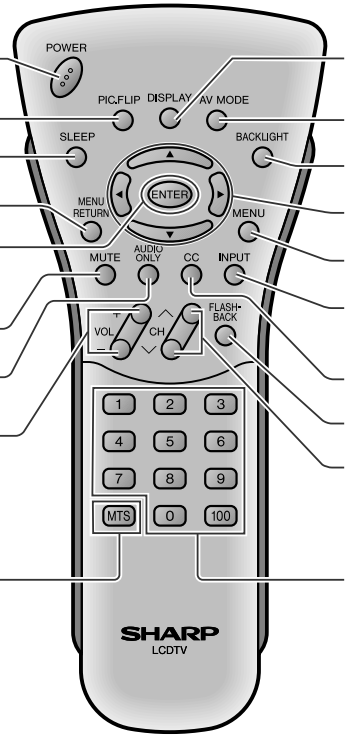

POWER
Switches the Liquid Crystal Television power on or standby.

PIC.FLIP
Sets the orientation of the picture.

SLEEP
Sets the sleep timer.

MENU RETURN
Returns to the previous screen.

ENTER
Executes a command.

MUTE
Mutes the sound.

AUDIO ONLY
Outputs audio without screen image.

VOL (+)/(–)
Sets the volume.

MTS
Selects audio settings.

DISPLAY
Displays the receiving channel and the current time for 10 seconds.

AV MODE
Selects preferred AV MODE.

BACKLIGHT
Adjusts the brightness of the screen.

▲/▼/◀/▶ (Cursor control)
Selects a desired item on the screen.

MENU
Displays the menu screen.

INPUT
Switches the input source between INPUT1, INPUT2, INPUT3 and TV mode.

CC
Displays Closed Caption subtitles.

FLASHBACK
Returns to the previous channel.

CH (⌃)/(⌄)
Selects a channel.

Channel Select
Sets the channel.

TV Signals in Your Region

This product is factory set to comply with the TV broadcasting system in the United States. For Brazil, Argentina and Uruguay, set the color system according to the country before using this product by following the table below.

The VIDEO INPUT mode is compatible with color systems worldwide and is automatically set.

Country	TV broadcasting system	Factory setting of color system		User setting
		TV	Video	TV
U.S.A.	Color: NTSC TV ch: US ch	NTSC (N358) US ch	World Multi Auto System	Not required or N/A
Canada, Mexico, Latin America	Color: NTSC TV ch: US ch	NTSC (N358) US ch	World Multi Auto System	Not required or N/A
Brazil	Color: PAL-M TV ch: US ch	NTSC (N358) US ch	World Multi Auto System	Set color system to PAL-M
Argentina, Uruguay	Color: PAL-N TV ch: US ch	NTSC (N358) US ch	World Multi Auto System	Set color system to PAL-N

The World Multi Auto System is compatible with all color systems indicated below.

① N358
② N443
③ PAL
④ PAL-M
⑤ PAL-N
⑥ SECAM
⑦ PAL-60

Preparation

Installing Batteries in the Remote Control

Before using the LCD TV set for the first time, install the two "AAA" size batteries supplied in the remote control. When the batteries become depleted and the remote control fails to operate, replace the batteries with new "AAA" size batteries.

1 Open the battery cover.

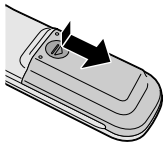

■ Slide the cover while pressing the (▬) part.

2 Insert two "AAA" size batteries.

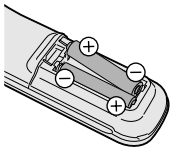

■ Place batteries with their terminals corresponding to the (+) and (–) indications in the battery compartment.

3 Close the battery cover.

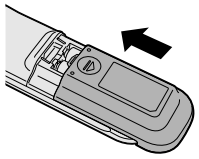

■ Engaging the lower claw with the remote control, close the cover.

⚠ Caution!

Precautions regarding batteries

■ Improper use of batteries can result in a leakage of chemicals and/or explosion. Be sure to follow the instructions below.
- Place batteries with their terminals corresponding to the (+) and (–) indications.
- Different types of batteries have different characteristics. Do not mix batteries of different types.
- Do not mix old and new batteries. Mixing old and new batteries can shorten the life of new batteries and/or cause old batteries to leak chemicals.
- Remove batteries as soon as they are depleted. Chemicals that leak from batteries can cause a rash. If chemical leakage is found, wipe it off with a cloth.
- The batteries supplied with the LCD TV set may have a shorter operating time due to storage conditions.
- If the remote control is not to be used for a long period of time, remove the batteries from the remote control.

Using the Remote Control

■ Use the remote control by pointing it towards the remote sensor window of the main unit. Objects between the remote control and sensor window may prevent proper operation.

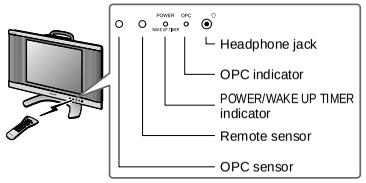

Cautions regarding use of the remote control

■ Do not apply shock to the remote control. In addition, do not expose the remote control to liquids, and do not place it in an area with high humidity.

■ Do not install or place the remote control in direct sunlight. The heat may cause deformation of the unit.

■ The remote control may not work properly if the remote sensor window is in direct sunlight or strong lighting. In such a case, change the angle of the lighting or main unit, or operate the remote control closer to the remote sensor window.

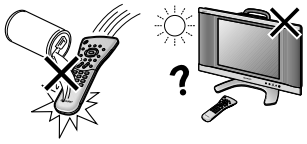

DIMENSIONS

■ LC-15B8U-S, LC-15B9U-SM

Unit: inch (mm)

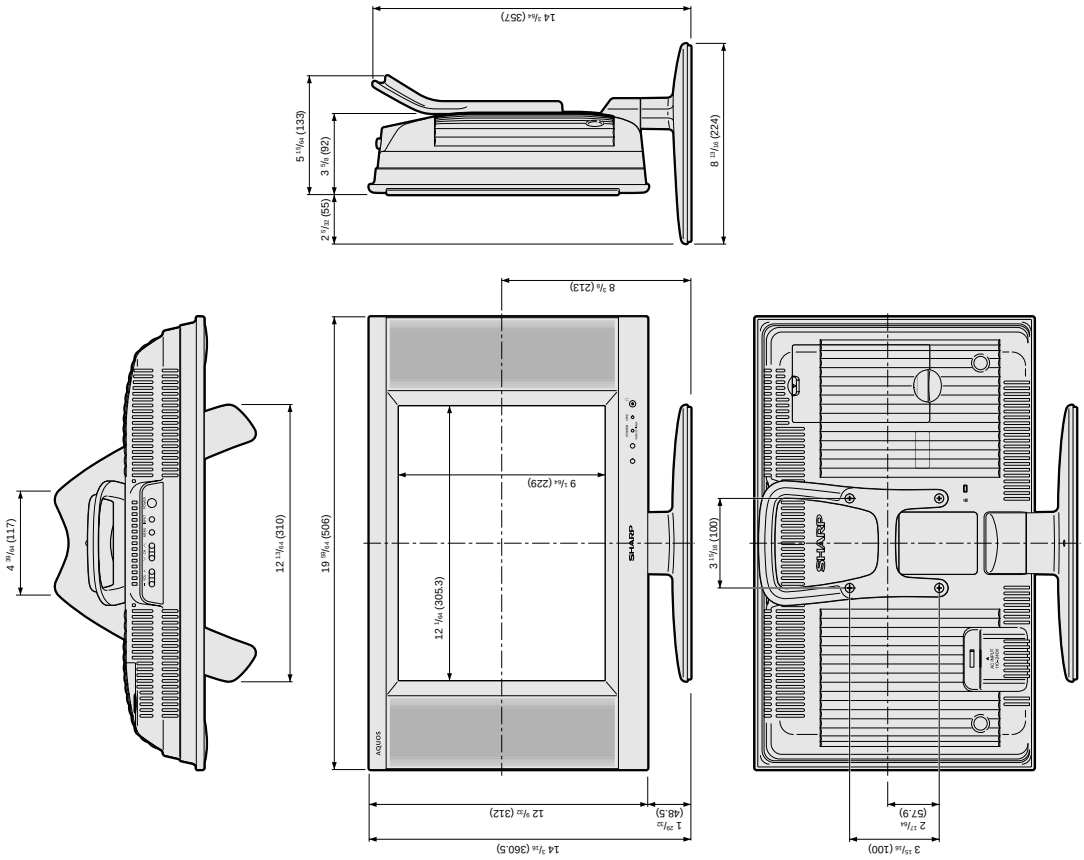

■ LC-13B8U-S

Unit: inch (mm)

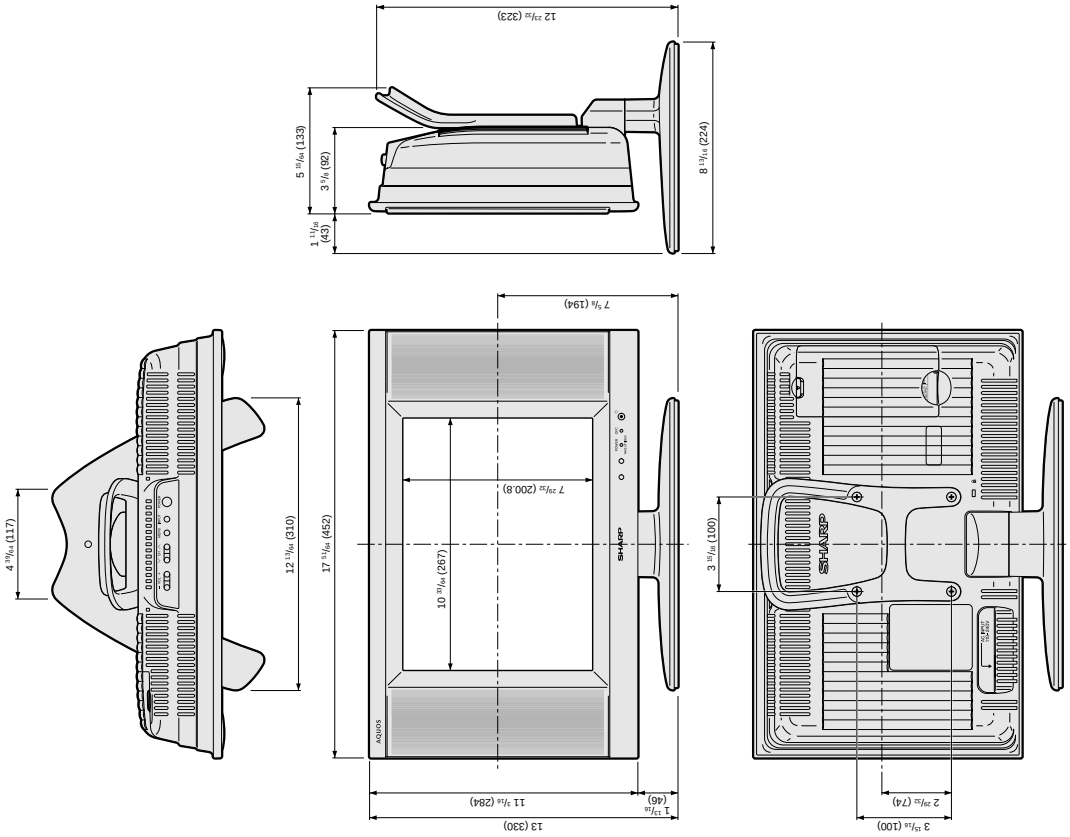

Downloaded from www.Manualslib.com manuals search engine

REMOVING OF MAJOR PARTS

1. Remove the stand cover fixing screw (1 pc.).
2. Remove the stand fixing screws (4 pcs.).
3. Remove the carrying handle fixing screws (4 pcs.).
4. Remove the terminal cover.
5. Remove the terminal screws (2 pcs.). (LC-13B8U-S)
5. Remove the terminal screws (4 pcs.). (LC-15B8U-S, LC-15B9U-SM)
6. Remove the cabinet B fixing screws (8 pcs.). (LC-13B8U-S)
6. Remove the cabinet B fixing screws (7 pcs.). (LC-15B8U-S, LC-15B9U-SM)
7. Remove the cabinet B after opening from the direction of an arrow.
8. Disconnect all the connectors from all the PWBs.

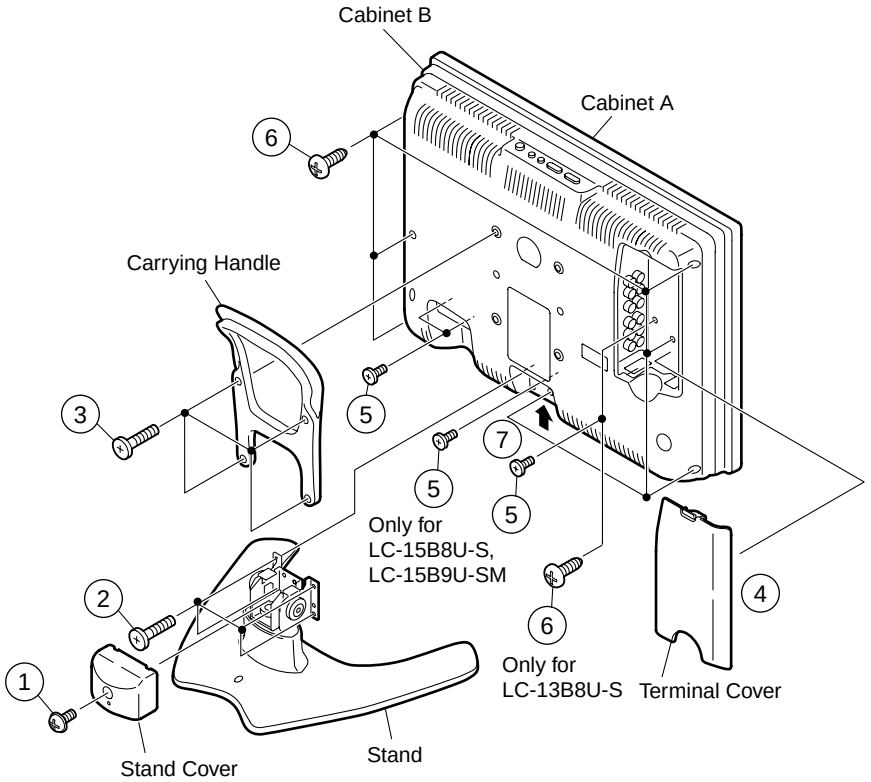

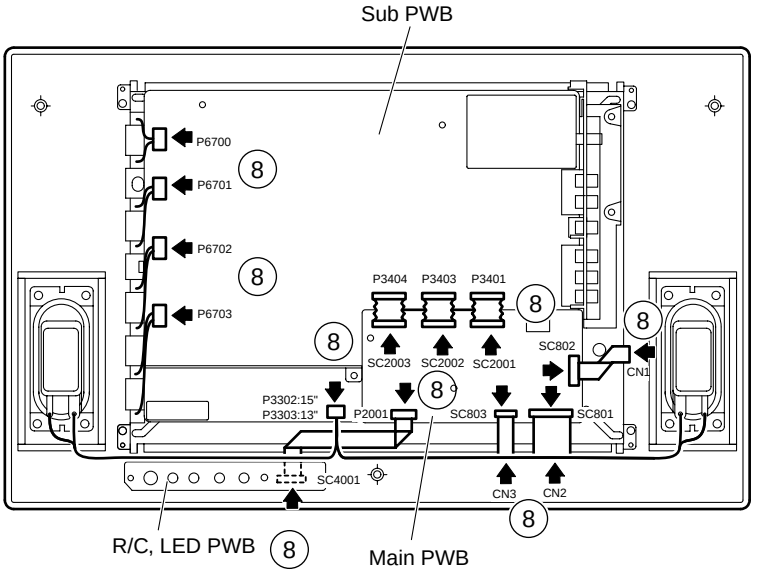

Downloaded from www.Manualslib.com manuals search engine

9. Remove the sub PWB fixing screws (4 pcs.).
10. Remove the chassis frame fixing screws (4 pcs.). (LC-13B8U-S)
10. Remove the chassis frame fixing screws (3 pcs.). (LC-15B8U-S, LC-15B9U-SM)
11. Remove the R/C, LED PWB fixing screws (2 pcs.).
12. Remove the main PWB fixing screws (3 pcs.).
13. Remove the 3 lock screws each from the right and left speakers and take out both the speakers.
14. Remove the LCD panel unit fixing screws (4 pcs.).

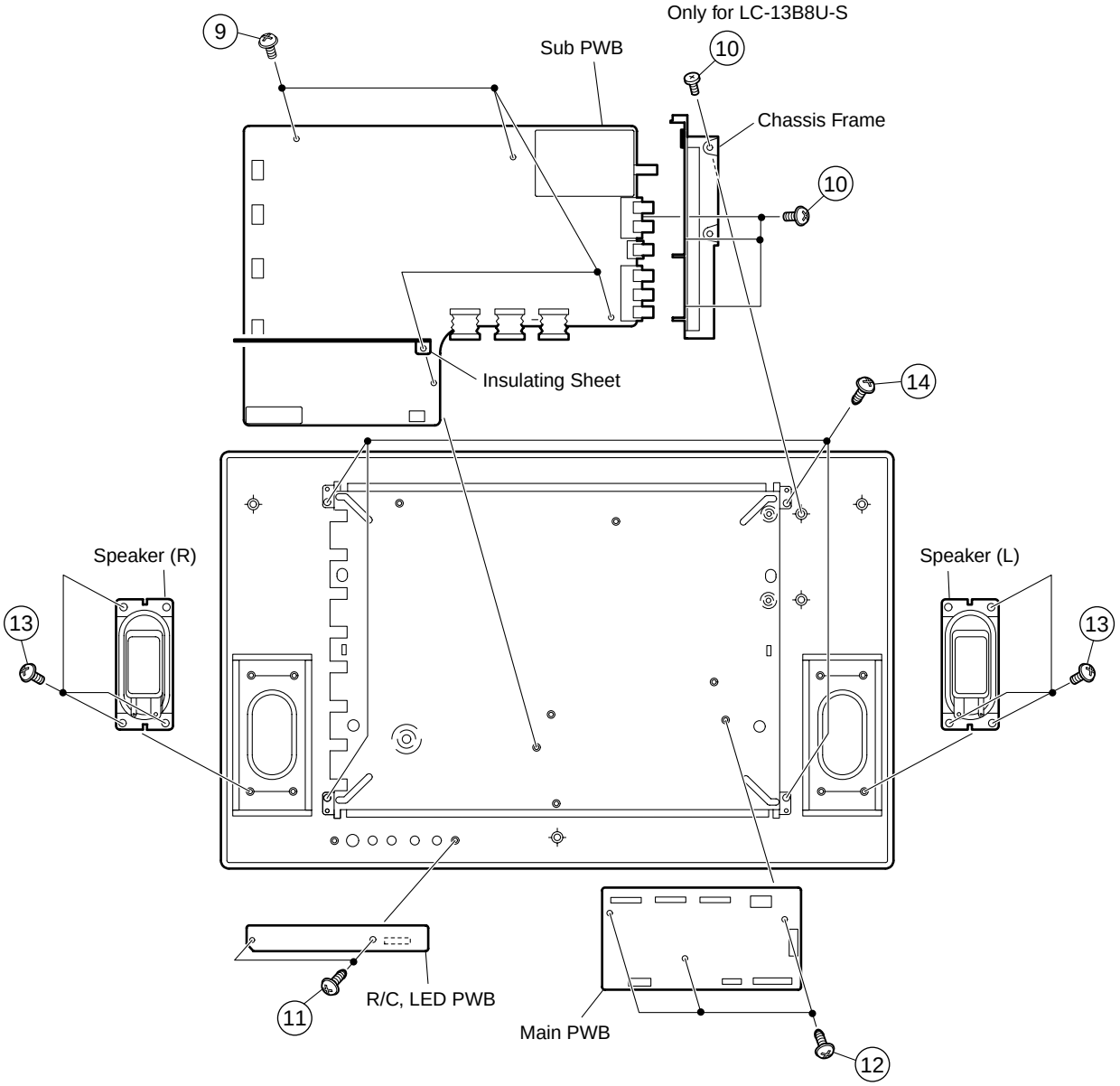

Downloaded from www.Manualslib.com manuals search engine

- Precautions in handling the LCD panel
  1. Handle it in a clean room. (above 50% humidity)
  2. The worker must wear an earth band.
  3. Be careful not to drop, vibrate and shock the panel.
  4. Use an ionizer. (within 30 cm)

15. Remove the four lock screws from the LCD panel, and detach the LCD panel unit.
16. Remove the diffusion sheets and diffusion plate.
17. Remove the lamp unit from the lamp holder (top). Then detach the (bottom)-left and (bottom)-right lamp holders.
18. Remove the reflection sheet from the back shield.

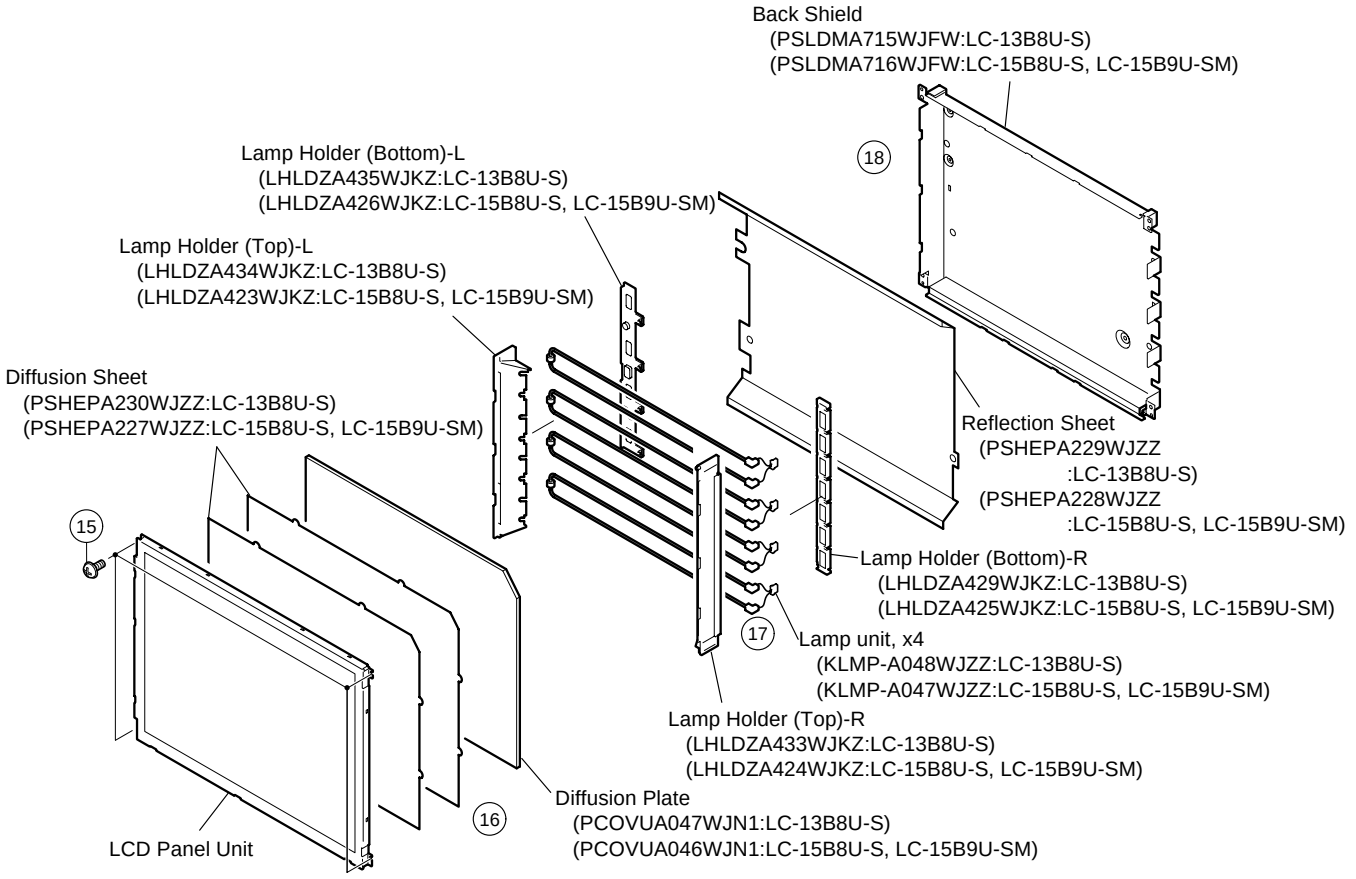

Downloaded from www.Manualslib.com manuals search engine

●Precautions in servicing the side B (backside) of the main PWB unit

1. Disconnect the FFC for connection between the main PWB (SC802) and LCD panel (CN1), and then connect the service-specific extension FFC (flat cable) (QCNW-B784WJZZ).
2. Disconnect the FFC for connection between the main PWB (SC801) and LCD panel (CN2), and then connect the service-specific extension FFC (flat cable) (QCNW-A556WJZZ).
3. Disconnect the FFC for connection between the main PWB (SC803) and LCD panel (CN3), and then connect the service-specific extension FFC (flat cable) (QCNW-A555WJZZ).
4. Disconnect the SC2001 side of the lead from between the main PWB (SC2001) and the sub PWB (P3401), and then connect the service-specific extension cable (QCNW-C461WJQZ).
5. Disconnect the SC2002 side of the lead from between the main PWB (SC2002) and the sub PWB (P3403), and then connect the service-specific extension cable (QCNW-C461WJQZ).
6. Disconnect the SC2003 side of the lead from between the main PWB (SC2003) and the sub PWB (P3404), and then connect the service-specific extension cable (QCNW-C461WJQZ).
7. Remove the lock screws (3 pcs.) from the main PWB, detach the PWB from the chassis frame, and then turn it over to service.

●Precautions in servicing the Chip Parts side (backside) of the sub PWB unit

8. Disconnect the SC2001 side of the lead from between the main PWB (SC2001) and the sub PWB (P3401), and then connect the service-specific extension cable (QCNW-C461WJQZ).
9. Disconnect the SC2002 side of the lead from between the main PWB (SC2002) and the sub PWB (P3403), and then connect the service-specific extension cable (QCNW-C461WJQZ).
10. Disconnect the SC2003 side of the lead from between the main PWB (SC2003) and the sub PWB (P3404), and then connect the service-specific extension cable (QCNW-C461WJQZ).
11. Remove the lock screws (4 pcs.) from the sub PWB and then turn it over to service.

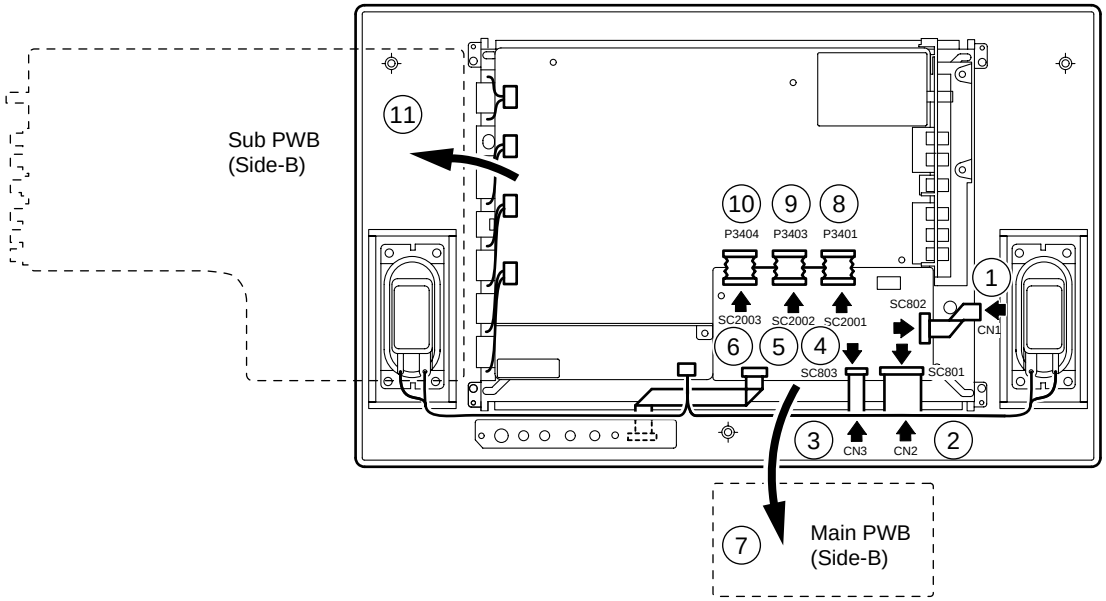

Step	Part No.	Description
1	QCNW-B784WJZZ	Extension Cable 30-pin Main (SC802)-LCD Panel (CN1)
2	QCNW-A556WJZZ	Extension Cable 50-pin Main (SC801)-LCD Panel (CN2)
3	QCNW-A555WJZZ	Extension Cable 20-pin Main (SC803)-LCD Panel (CN3)
4, 8	QCNW-C461WJQZ	Extension Cable 15-pin Main (SC2001)-Sub (P3401)
5, 9	QCNW-C461WJQZ	Extension Cable 15-pin Main (SC2002)-Sub (P3403)
6, 10	QCNW-C461WJQZ	Extension Cable 15-pin Main (SC2003)-Sub (P3404)

Downloaded from www.Manualslib.com manuals search engine

ADJUSTING PROCEDURE OF EACH SECTION

1. Preparations before adjustment

(1) Keep the AC power cable directly plugged in a wall outlet.
AC110V~240V

[1] Adjustment procedures
1-1. Adjusting the checker
Power on (initialization) → Setting the model number and screen size
1-2. Finishing process adjustments
Assembling → Power on → Adjustment process mode (bus connector) → AD converter level, common bias, TAMP and white balance (cut-off and gain) adjustments

[2] Entering the checker mode/adjustment process mode
2-1. Calling the checker mode
* Keep KEY-5 (pin (82) of microprocessor) at "L" level and turn on the power.

KEY-4	KEY-5	Mode shift
H	H	Normal mode (Fresh data written and saved on EEPROM)
L	H	Shift to adjustment process mode
H	L	Operation with master ROM settings in the checker mode (EEPROM still brand-new after the checker mode)
L	L	EEPROM initialized and microprocessor's master settings written (process adjustment values not yet written)

2-2. Calling the adjustment process mode
There are two ways to call this mode.
* Keep KEY-4 (pin (81) of microprocessor) at "L" level and turn on the power.
* For servicing: ① Hold down the "INPUT" and "VOL (–)" keys at once, and turn on the power switch. ("K" appears at the top left onscreen to indicate that the checker mode is on.) → ② Press the "CH (∨)" and "VOL (–)" keys at once. (The adjustment process mode screen shows up.) ····· To quit the mode, turn off the power (using the power switch on the set or the remote controller).

[3] Key operation
■Basic operation
* Using the "CH (∧)/(∨)" keys, select a receiving channel.
* Using the "INPUT" key, select an input.
* Using the "cursor up/down keys, select an adjustment item. (When the "cursor down" key is pressed at the bottom item of a page, the top item on the next page will be selected. When the "cursor up" key is pressed at the top item of a page, the bottom item on the previous page will be selected.)
* Using the "VOL (+)/(–)" or "cursor right/left" keys, adjust the selected item.
* Press the "MENU" key, and the next item will be selected. (When the "MENU" key is pressed at the bottom item of a page, the top item on the next page will be selected.)

■Hierarchical shift
* Press the "ENTER" key on any item other than I2C DATA on Page 9, the setting page of the item will show up.
* To quit the setting page, press the "FLASHBACK" key.

Downloaded from www.Manualslib.com manuals search engine

[4] Initialization

4-1. Connect both pins (81) and (82) of IC2001 (microprocessor) to GND, and turn on the power.

4-2. Make sure the model number "A629" is selected. *Note: This setting cannot be changed.

4-3. Make sure "13" (LC-13B8U), "15" (LC-15B8/B9U) (inches) is selected for the screen size.

*Note: This setting cannot be changed.

(Onscreen display of adjustment process menu page 1)

	0	1	2	3	4	5	6	7	8	9	10	11	12	13	14	15	16	17	18	19	20	21	22	23	24	25	26
0	1																										
1		▶	M	O	D	E	L																A	6	2	9	
2			I	N	C	H		S	I	Z	E															＊	
3			E	R	R	O	R		N	O		R	E	S	E	T										0	
4			P	U	B	L	I	C		M	O	D	E											O	F	F	
5			V	-	C	H	I	P																		1	
6			E	X	T		C	O	N	T	R	O	L											O	F	F	
7																											
8																											

＊ : 13 (LC-13B8U-S)
: 15 (LC-15B8/B9U-S)

[5] Adjustments

5-1. AD converter level adjustment

D3 input

1) Feed only the Y component of D3 75% color bar signal.
   Equipment used: LEADER LT446
   Signal name: COLOR BAR 75%
   Setting: 01: 1920 x 1080 / 60i
   H: 33.72 kHz, V: 29.97 Hz
2) Turn on the AUTO GAIN-OFFSET1 item on adjustment process page 7.

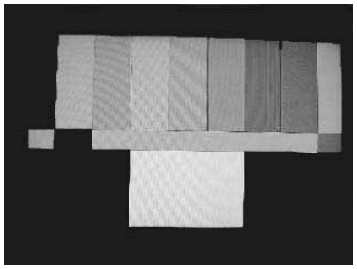

5-2. Common bias adjustment

1) Adjust the "COM BIAS" setting on adjustment process page 2 so that flickering gets to minimum. With the setting changed, the flicker check built-in test pattern will show up.

5-3. TAMP adjustment

1) Receive the 75% standard color bar signal in the TV input mode.
2) If the "YDATA" reading on adjustment process page 2 is not within the range in the table below, readjust the "NTSC TAMP" item on the same page and make sure the "YDATA" reading is as specified.
   * Note that the setting range may be different from model to model.
3) Then add 6 to the "NTSC TAMP" setting and enter this value for "PAL-M TAMP" and "PAL-N TAMP".

Model	LC-13B8U	LC-15B8/B9U
Setting	155-158	155-158

Downloaded from www.Manualslib.com manuals search engine

Reference
(Onscreen display of adjustment process menu page 2)

	0	1	2	3	4	5	6	7	8	9	10	11	12	13	14	15	16	17	18	19	20	21	22	23	24	25	26
0	2																										
1		▶	C	O	M		B	I	A	S												1	2	0			
2			T	A	M	P		L														1	5	5			
3			Y	D	A	T	A															1	5	7			
4			T	A	M	P		H														1	5	8			
5			N	T	S	C		T	A	M	P												8	5			
6			P	A	L	-	M		T	A	M	P											9	1			
7			P	A	L	-	N		T	A	M	P											9	1			
8																											

Y Data
(White 75%)

5-4. White balance adjustment (Adjust surrounding brightness to 10 lx or less.)

1) Adjustment procedure (Call the AV input mode with INPUT3 or INPUT4.)
Adjust the RGB CUTOFF2 setting for the 40% white level, and the RGB-GAIN setting for the white 80% level.
(1) Adjustment
[Input signal] White 80% (191 gradations) and white 40% (92 gradations) signals
[Adjustment value] RGB CUTOFF2 and RGB-GAIN settings on adjustment process page 3

			Adjustment spec.	Inspection spec.
White 80%	x=0.291	±0.006	±0.012	Radius from center point
	y=0.300	±0.006	±0.012	Radius from center point
				(Reference brightness: 300 cd/m^2)
White 40%	x=0.276	±0.006	±0.012	Radius from center point
	y=0.282	±0.006	±0.012	Radius from center point
				(Reference brightness: 50 cd/m^2)

Cut-off (RGB CUTOFF2): Fix the G setting at 0. Vary the R and B settings. Adjustable range ±30.
Gain (RGB-GAIN): Reduce the settings of the two stronger colors. Adjustable range 0 to -70.
(The values are based on the Minolta CA-210.)

[6] Factory settings

6-1. Hold down the "INPUT" and "VOL (–)" keys on the set at once, and turn on the power. Hold down the "CH (∧)" and "VOL (+)" keys at once. ("SETTING COMPLETE" appears on the screen.)
*Note: Immediately after the factory settings have been made, turn off the power switch.
(The next time the power is turned on, the set gets started in the EZ SETUP mode. An extra key-in just after the factory setting may cause the set to malfunction.)

SETTING COMPLETE

Downloaded from www.Manualslib.com manuals search engine

6-2. Intial value of factory settings

ITEM		FUNCTION
EXCEPT MENU		
EZ SETUP START AT POWER ON.		ON
	SELECT LANGUAGE	ENGLISH
	CH-SETTING	ON
	AUTO CLOCK	ON
LAST CHANNEL		2ch
LAST TV/INPUT		TV
FLASH BACK		2ch
VOLUME		20

MENU-PICTURE			STANDARD	MOVIE	GAME
AV MODE		DYNAMIC	OFF	OFF	OFF
OPC		OFF	BRIGHT	7	NORMAL (9)
BACKLIGHT		BRIGHT (17)	30	30	30
CONTRAST		40	0	0	0
BRIGHTNESS		0	0	0	0
COLOR		5	0	0	0
TINT		0	0	0	0
SHARPNESS		0	0	0	0
ADVANCED	COLOR TEMP.	MIDDLE			
	RED	0			
	GREEN	0			
	BLUE	0			

MENU-AUDIO	
TREBLE	0
BASS	0
BALANCE	0

MENU-SETUP				
CH-SETTING	AIR/CABLE			AIR
	CH MEMORY	SKIP		IT IS ON IN ALL CHANNEL
MTS				STEREO
CLOCK	SET	AUTO	EDS CH	AUTO
		MENU	DST	OFF
			TIME	12:00AM
	TIME DISPLAY			ON
INPUT3 SELECT				IN
V-CHIP BLOCK	INPUT SECRET NO.			CLEAR
	MPAA	G, PG, PG-13, R, NC-17, X		ALL CLEAR
	TV GUIDELINES	TV-Y, TV-Y7, TV-G, TV-PG, TV-14, TV-MA		ALL CLEAR
		BLOCK CONTENT	D, L, S, V, FV	ALL CLEAR
	CAN. ENGLISH RATINGS	C, C8+, G, PG, 14+, 18+		ALL CLEAR
	CAN. FRENCH RATINGS	G, 8 ans+, 13 ans+, 16 ans+, 18 ans+		ALL CLEAR
	STATUS			OFF
CLOSED CAPTION				OFF
COLOR SYSTEM (TV)				N358
COLOR SYSTEM (INPUT2,3)				AUTO
LANGUAGE				ENGLISH

MENU-OPTION		
VIEW MODE		4 : 3
AUDIO ONLY		OFF
BLUE SCREEN		OFF
SLEEP TIMER		OFF
WAKEUP TIMER	TIMER	OFF
	TIME	12:00AM
	CHANNEL	2
	VOLUME	20
NO SIGNAL OFF		DISABLE
NO OPERATION OFF		DISABLE
PICTURE FLIP		NORMAL

Downloaded from www.Manualslib.com manuals search engine

LIST OF THE ADJUSTMENT PROCESS MODE MENU

For calling the adjustment process mode and keying in this mode, refer back to "ADJUSTING PROCEDURE OF EACH SECTION".

DEFAULT CHART OF ADJUSTMENT PROCESS 1ST HIERARCHICAL ITEMS

Page No.	Item	Initial Value		Function	Response precautions on servicing (Do not change other items than designated.)
		13inch	15inch		
BASIC SETTING					
1	MODEL	A629	A629	MODEL NAME SELECTION	CANNOT BE CHANGED.
	INCH SIZE	13	15	SCREEN SIZE SELECT (20-INCH AND 13/15-INCH SETTINGS NOT SWITCHABLE IN CASE OF DIFFERENT SYSTEMS) WHEN INITIALIZED.	USED FOR INITIALIZATION, NOT MODIFIABLE FOR OTHER CASES. DATA FOR OTHER CASES. DATA REWRITE AND READJUSTMENT REQUIRED WHEN
	ERROR NO RESET	0	0	LAMP ERROR COUNT AND RESET	SEE THE LAMP ERROR DETECTION.
	PUBLIC MODE	OFF	OFF	HOTEL MODE SETTING	NOT USED
	V-CHIP	1	1	VCHIP LINE MUTE SETTING	NOT USED
	EXT CONTROL	OFF	OFF	BUS, UART OPEN	NOT USED
	ROM AND GAIBU VERSION NUMBERS DISPLAYED AT THE BOTTOM.				
VIDEO ADJUSTMENT					
2	COM BIAS	—	—	COMMON BIAS ADJUSTMENT	SEE THE ADJUSTMENT PROCEDURES.
		120	120		
	TAMP L	155	155	Y LOWER LIMIT SETTING AT TAMP ADJUSTMENT	NOT USED
	YDATA	—	—	DATA READ VALUE AT TAMP ADJUSTMENT	SEE THE ADJUSTMENT PROCEDURES.
	TAMP H	158	158	Y UPPER LIMIT SETTING AT TAMP ADJUSTMENT	NOT USED
	NTSC TAMP	90	90	TAMP ADJUSTMENT	SEE THE ADJUSTMENT PROCEDURES.
	PAL-M TAMP	96	96	TAMP ADJUSTMENT	SEE THE ADJUSTMENT PROCEDURES.
	PAL-N TAMP	96	96	TAMP ADJUSTMENT	SEE THE ADJUSTMENT PROCEDURES.
WHITE BALANCE ADJUSTMENT					
3	R CUTOFF2	—	—	RED CUT-OFF ADJUSTMENT 2	REFER TO METHOD OF ADJUSTMENT.
	G CUTOFF2	—	—	GREEN CUT-OFF ADJUSTMENT 2	REFER TO METHOD OF ADJUSTMENT.
	B CUTOFF2	—	—	BLUE CUT-OFF ADJUSTMENT 2	REFER TO METHOD OF ADJUSTMENT.
	R-GAIN	—	—	WHITE BALANCE ADJUSTMENT 2	REFER TO METHOD OF ADJUSTMENT.
	G-GAIN	—	—	WHITE BALANCE ADJUSTMENT 2	REFER TO METHOD OF ADJUSTMENT.
	B-GAIN	—	—	WHITE BALANCE ADJUSTMENT 2	REFER TO METHOD OF ADJUSTMENT.
	RGB GAMMA	1	1	RGB γ COEFFICIENT SETTING	NOT USED
1125I/750P AD ADJUSTMENT					
7	AD9883 DATA	0	0	AD9883 DATA WRITE AND READ	NOT USED
	AD9883 DATA	WAIT	WAIT	WRITE AND READ EXECUTED	NOT USED
	AUTO GAIN-OFFSET1	OFF	OFF	AD9883 GAIN AND OFFSET AUTO ADJUSTMENT OFF/RUN	REFER TO METHOD OF ADJUSTMENT.
	AD R GAIN	120	120	1125I, 750P INPUT RED GAIN ADJUSTMENT	REFER TO METHOD OF ADJUSTMENT.
	AD G GAIN	120	120	1125I, 750P INPUT GREEN GAIN ADJUSTMENT	REFER TO METHOD OF ADJUSTMENT.
	AD B GAIN	120	120	1125I, 750P INPUT BLUE GAIN ADJUSTMENT	REFER TO METHOD OF ADJUSTMENT.
	AD R OFFSET	128	128	1125I, 750P INPUT RED OFFSET ADJUSTMENT	REFER TO METHOD OF ADJUSTMENT.
	AD G OFFSET	128	128	1125I, 750P INPUT GREEN OFFSET ADJUSTMENT	REFER TO METHOD OF ADJUSTMENT.
	AD B OFFSET	128	128	1125I, 750P INPUT BLUE OFFSET ADJUSTMENT	REFER TO METHOD OF ADJUSTMENT.
	RGTAR	A3	A3	1125I, 750P INPUT RED GAIN ADJUSTMENT TARGET	NOT USED
	GGTAR	A3	A3	1125I, 750P INPUT GREEN GAIN ADJUSTMENT TARGET	NOT USED
	BGTAR	A3	A3	1125I, 750P INPUT BLUE GAIN ADJUSTMENT TARGET	NOT USED
	RGCAL	—	—	Y LEVEL, CHROMA CALCULATION DISPLAY	NOT USED
	GGCAL	—	—	Y LEVEL, CHROMA CALCULATION DISPLAY	NOT USED
	BGCAL	—	—	Y LEVEL, CHROMA CALCULATION DISPLAY	NOT USED
	ROCAL	—	—	CLAMP RANGE Y LEVEL, WHITE LEVEL CALCULATION DISPLAY	NOT USED
	GOCAL	—	—	CLAMP RANGE Y LEVEL, WHITE LEVEL CALCULATION DISPLAY	NOT USED
	BOCAL	—	—	CLAMP RANGE Y LEVEL, WHITE LEVEL CALCULATION DISPLAY	NOT USED

Downloaded from www.Manualslib.com manuals search engine

Page No.	Item	Initial Value		Function	Response precautions on servicing (Do not change other items than designated.)
		13inch	15inch		

TABLE OF VARIOUS SETTINGS

9	I2C DATA	0	0	I2C BUS CONTROL IC DATA WRITE AND READ	NOT USED
	I2C DATA	WAIT	WAIT	WRITE AND READ EXECUTED	NOT USED
	SOUND	—	—	SHIFT TO THE SOUND ADJUSTMENT PAGE	USE ENTER KEY TO GO TO THE SOUND ADJUSTMENT PAGE.
	DVP	—	—	SHIFT TO THE DVP ADJUSTMENT PAGE	USE ENTER KEY TO GO TO THE TC ADJUSTMENT PAGE.
	TUNER	—	—	SHIFT TO THE TUNER ADJUSTMENT PAGE	USE ENTER KEY TO GO TO THE TUNER ADJUSTMENT PAGE.
	OTHERS	—	—	SHIFT TO THE OTHER ADJUSTMENT PAGE	USE ENTER KEY TO GO TO THE OTHER ADJUSTMENT PAGE.

AUDIO ADJUSTMENT PROCESS SPECIFICATIONS

Page No.	Item	Initial Value		Function	Response precautions on servicing (Do not change other items than designated.)
		13inch	15inch		

AUDIO ADJUSTMENT

SOUND1	VOLUME	20	20	SOUND VOLUME	NOT USED
	MSP DATA	0	0	AUDIO IC MSP DATA WRITE AND READ	NOT USED
	MSP DATA	WAIT	WAIT	WRITE AND READ EXECUTED	NOT USED
	CARRIER MUTE	ON	ON	AUDIO OUTPUT SETTING WITHOUT TV SYNC	NOT USED
	IGR THR	12D	12D	IGR THRESH LEVEL	NOT USED

AUDIO ADJUSTMENT

SOUND2	PRESCALE SCART	27	27	PRE-SCALE SETTING (EXTERNAL INPUT)	NOT USED
	PRESCALE FM/AM-M	31	31	PRE-SCALE SETTING (TV)	NOT USED

AUDIO ADJUSTMENT

SOUND3	BAND1 MIN	TV	-0425	-0400	EQUALIZER SETTING (WITH TV INPUT)	NOT USED
		OTHER	-0425	-0400	EQUALIZER SETTING (WITH OTHER INPUT THAN TV)	NOT USED
	BAND1 CNT	TV	+0375	+0400	EQUALIZER SETTING (WITH TV INPUT)	NOT USED
		OTHER	+0375	+0400	EQUALIZER SETTING (WITH OTHER INPUT THAN TV)	NOT USED
	BABD1 MAX	TV	+1175	+1200	EQUALIZER SETTING (WITH TV INPUT)	NOT USED
		OTHER	+1175	+1200	EQUALIZER SETTING (WITH OTHER INPUT THAN TV)	NOT USED
	BAND2 MIN	TV	-0375	-0625	EQUALIZER SETTING (WITH TV INPUT)	NOT USED
		OTHER	-0375	-0625	EQUALIZER SETTING (WITH OTHER INPUT THAN TV)	NOT USED
	BAND2 CNT	TV	-0075	-0325	EQUALIZER SETTING (WITH TV INPUT)	NOT USED
		OTHER	-0075	-0325	EQUALIZER SETTING (WITH OTHER INPUT THAN TV)	NOT USED
	BABD2 MAX	TV	+0225	-0025	EQUALIZER SETTING (WITH TV INPUT)	NOT USED
		OTHER	+0225	-0025	EQUALIZER SETTING (WITH OTHER INPUT THAN TV)	NOT USED
	BAND3	TV	+0100	+0100	EQUALIZER SETTING (WITH TV INPUT)	NOT USED
		OTHER	+0100	+0100	EQUALIZER SETTING (WITH OTHER INPUT THAN TV)	NOT USED

AUDIO ADJUSTMENT

SOUND4	BAND4 MIN	TV	-0175	-0100	EQUALIZER SETTING (WITH TV INPUT)	NOT USED
		OTHER	-0175	-0100	EQUALIZER SETTING (WITH OTHER INPUT THAN TV)	NOT USED
	BAND4 CNT	TV	+0125	+0200	EQUALIZER SETTING (WITH TV INPUT)	NOT USED
		OTHER	+0125	+0200	EQUALIZER SETTING (WITH OTHER INPUT THAN TV)	NOT USED
	BAND4 MAX	TV	+0425	+0500	EQUALIZER SETTING (WITH TV INPUT)	NOT USED
		OTHER	+0425	+0500	EQUALIZER SETTING (WITH OTHER INPUT THAN TV)	NOT USED
	BAND5 MIN	TV	-0500	-0400	EQUALIZER SETTING (WITH TV INPUT)	NOT USED
		OTHER	-0500	-0400	EQUALIZER SETTING (WITH OTHER INPUT THAN TV)	NOT USED
	BAND5 CNT	TV	+0300	+0400	EQUALIZER SETTING (WITH TV INPUT)	NOT USED
		OTHER	+0300	+0400	EQUALIZER SETTING (WITH OTHER INPUT THAN TV)	NOT USED
	BAND5 MAX	TV	+1100	+1200	EQUALIZER SETTING (WITH TV INPUT)	NOT USED
		OTHER	+1100	+1200	EQUALIZER SETTING (WITH OTHER INPUT THAN TV)	NOT USED

Downloaded from www.Manualslib.com manuals search engine

DVP ADJUSTMENT PROCESS ITEMS

Page No.	Item	Initial Value		Function	Response precautions on servicing (Do not change other items than designated.)
		13inch	15inch		
DVP1	DVP DATA 0000 F0 ------(----)	—	—	DVP-RELATED GENERAL-PURPOSE VARIABLE SETTINGS	NOT USED
	DVP TEST PATTERN	0	0	TEST PATTERN SELECT	SEE THE ADJUSTMENT PROCESS MODE TEST PATTERNS.
	VCDOFFSET	15	15	VERTICAL COUNT-DOWN MINIMUM OSCILLATION CYCLE	NOT USED
	VCDWINDOW	30	30	VERTICAL COUNT-DOWN SYNC RANGE	NOT USED
DVP3	N358 TV CONT	144	144	N358 IMAGE SETTING (TV)	NOT USED
	N358 AV CONT	144	144	N358 IMAGE SETTING (COMPOSITE, S VIDEO)	NOT USED
	N358 TV BRIGHT	122	122	N358 BRIGHTNESS SETTING (TV)	NOT USED
	N358 AV BRIGHT	122	122	N358 BRIGHTNESS SETTING (COMPOSITE, S VIDEO)	NOT USED
	N358 TV COLOR	52	52	N358 COLOR DENSITY SETTING (TV)	NOT USED
	N358 AV COLOR	52	52	N358 COLOR DENSITY SETTING (COMPOSITE, S VIDEO)	NOT USED
	N358 TV TINT	138	138	N358 TINT SETTING (TV)	NOT USED
	N358 AV TINT	138	138	N358 TINT SETTING (COMPOSITE, S VIDEO)	NOT USED
	N358 TV SHARP V	100	100	N358 V PICTURE QUALITY SETTING (TV)	NOT USED
	N358 AV SHARP V	100	100	N358 V PICTURE QUALITY SETTING (COMPOSITE, S VIDEO)	NOT USED
	N358 TV SHARP H1	150	150	N358 H PICTURE QUALITY SETTING 1 (TV)	NOT USED
	N358 AV SHARP H1	150	150	N358 H PICTURE QUALITY SETTING 1 (COMPOSITE, S VIDEO)	NOT USED
	N358 TV SHARP H2	130	130	N358 H PICTURE QUALITY SETTING 2 (TV)	NOT USED
	N358 AV SHARP H2	150	150	N358 H PICTURE QUALITY SETTING 2 (COMPOSITE, S VIDEO)	NOT USED
DVP4	N443 AV CONT	144	144	N443 IMAGE SETTING (COMPOSITE, S VIDEO)	NOT USED
	N443 AV BRIGHT	122	122	N443 BRIGHTNESS SETTING (COMPOSITE, S VIDEO)	NOT USED
	N443 AV COLOR	52	52	N443 COLOR DENSITY SETTING (COMPOSITE, S VIDEO)	NOT USED
	N443 AV TINT	138	138	N443 TINT SETTING (COMPOSITE, S VIDEO)	NOT USED
	N443 AV SHARP V	100	100	N443 V PICTURE QUALITY SETTING (COMPOSITE, S VIDEO)	NOT USED
	N443 AV SHARP H1	150	200	N443 H PICTURE QUALITY SETTING 1 (COMPOSITE, S VIDEO)	NOT USED
	N443 AV SHARP H2	150	100	N443 H PICTURE QUALITY SETTING 2 (COMPOSITE, S VIDEO)	NOT USED
DVP5	PAL AV CONT	144	144	PAL IMAGE SETTING (COMPOSITE, S VIDEO)	NOT USED
	PAL AV BRIGHT	122	122	PAL BRIGHTNESS SETTING (COMPOSITE, S VIDEO)	NOT USED
	PAL AV COLOR	52	52	PAL COLOR DENSITY SETTING (COMPOSITE, S VIDEO)	NOT USED
	PAL AV TINT	138	138	PAL TINT SETTING (COMPOSITE, S VIDEO)	NOT USED
	PAL AV SHARP V	100	100	PAL V PICTURE QUALITY SETTING (COMPOSITE, S VIDEO)	NOT USED
	PAL AV SHARP H1	150	150	PAL H PICTURE QUALITY SETTING 1 (COMPOSITE, S VIDEO)	NOT USED
	PAL AV SHARP H2	150	150	PAL H PICTURE QUALITY SETTING 2 (COMPOSITE, S VIDEO)	NOT USED
DVP6	SECAM AV CONT	144	144	SECAM IMAGE SETTING (COMPOSITE, S VIDEO)	NOT USED
	SECAM AV BRIGHT	122	122	SECAM BRIGHTNESS SETTING (COMPOSITE, S VIDEO)	NOT USED
	SECAM AV COLOR	52	52	SECAM COLOR DENSITY SETTING (COMPOSITE, S VIDEO)	NOT USED
	SECAM AV TINT	138	138	SECAM TINT SETTING (COMPOSITE, S VIDEO)	NOT USED
	SECAM AV SHARP V	100	100	SECAM V PICTURE QUALITY SETTING (COMPOSITE, S VIDEO)	NOT USED
	SECAM AV SHARP H1	150	150	SECAM H PICTURE QUALITY SETTING 1 (COMPOSITE, S VIDEO)	NOT USED
	SECAM AV SHARP H2	150	150	SECAM H PICTURE QUALITY SETTING 2 (COMPOSITE, S VIDEO)	NOT USED
DVP7	PAL60 AV CONT	144	144	PAL60 IMAGE SETTING (COMPOSITE, S VIDEO)	NOT USED
	PAL60 AV BRIGHT	122	122	PAL60 BRIGHTNESS SETTING (COMPOSITE, S VIDEO)	NOT USED
	PAL60 AV COLOR	52	52	PAL60 COLOR DENSITY SETTING (COMPOSITE, S VIDEO)	NOT USED
	PAL60 AV TINT	138	138	PAL60 TINT SETTING (COMPOSITE, S VIDEO)	NOT USED
	PAL60 AV SHARP V	100	100	PAL60 V PICTURE QUALITY SETTING (COMPOSITE, S VIDEO)	NOT USED
	PAL60 AV SHARP H1	150	150	PAL60 H PICTURE QUALITY SETTING 1 (COMPOSITE, S VIDEO)	NOT USED
	PAL60 AV SHARP H2	150	150	PAL60 H PICTURE QUALITY SETTING 2 (COMPOSITE, S VIDEO)	NOT USED
DVP8	PAL-M TV CONT	144	144	PAL-M IMAGE SETTING (TV)	NOT USED
	PAL-M AV CONT	144	144	PAL-M IMAGE SETTING (COMPOSITE, S VIDEO)	NOT USED
	PAL-M TV BRIGHT	122	122	PAL-M BRIGHTNESS SETTING (TV)	NOT USED
	PAL-M AV BRIGHT	122	122	PAL-M BRIGHTNESS SETTING (COMPOSITE, S VIDEO)	NOT USED
	PAL-M TV COLOR	52	52	PAL-M COLOR DENSITY SETTING (TV)	NOT USED
	PAL-M AV COLOR	52	52	PAL-M COLOR DENSITY SETTING (COMPOSITE, S VIDEO)	NOT USED
	PAL-M TV TINT	138	138	PAL-M TINT SETTING (TV)	NOT USED
	PAL-M AV TINT	138	138	PAL-M TINT SETTING (COMPOSITE, S VIDEO)	NOT USED
	PAL-M TV SHARP V	100	100	PAL-M V PICTURE QUALITY SETTING (TV)	NOT USED
	PAL-M AV SHARP V	100	100	PAL-M V PICTURE QUALITY SETTING (COMPOSITE, S VIDEO)	NOT USED
	PAL-M TV SHARP H1	150	150	PAL-M H PICTURE QUALITY SETTING 1 (TV)	NOT USED
	PAL-M AV SHARP H1	150	150	PAL-M H PICTURE QUALITY SETTING 1 (COMPOSITE, S VIDEO)	NOT USED
	PAL-M TV SHARP H2	130	130	PAL-M H PICTURE QUALITY SETTING 2 (TV)	NOT USED
	PAL-M AV SHARP H2	150	150	PAL-M H PICTURE QUALITY SETTING 2 (COMPOSITE, S VIDEO)	NOT USED

Downloaded from www.Manualslib.com manuals search engine

Page No.	Item	Initial Value		Function	Response precautions on servicing (Do not change other items than designated.)
		13inch	15inch		
DVP9	PAL-N TV CONT	144	144	PAL-N IMAGE SETTING (TV)	NOT USED
	PAL-N AV CONT	144	144	PAL-N IMAGE SETTING (COMPOSITE, S VIDEO)	NOT USED
	PAL-N TV BRIGHT	122	122	PAL-N BRIGHTNESS SETTING (TV)	NOT USED
	PAL-N AV BRIGHT	122	122	PAL-N BRIGHTNESS SETTING (COMPOSITE, S VIDEO)	NOT USED
	PAL-N TV COLOR	52	52	PAL-N COLOR DENSITY SETTING (TV)	NOT USED
	PAL-N AV COLOR	52	52	PAL-N COLOR DENSITY SETTING (COMPOSITE, S VIDEO)	NOT USED
	PAL-N TV TINT	138	138	PAL-N TINT SETTING (TV)	NOT USED
	PAL-N AV TINT	138	138	PAL-N TINT SETTING (COMPOSITE, S VIDEO)	NOT USED
	PAL-N TV SHARP V	100	100	PAL-N V PICTURE QUALITY SETTING (TV)	NOT USED
	PAL-N AV SHARP V	100	100	PAL-N V PICTURE QUALITY SETTING (COMPOSITE, S VIDEO)	NOT USED
	PAL-N TV SHARP H1	150	150	PAL-N H PICTURE QUALITY SETTING 1 (TV)	NOT USED
	PAL-N AV SHARP H1	150	150	PAL-N H PICTURE QUALITY SETTING 1 (COMPOSITE, S VIDEO)	NOT USED
	PAL-N TV SHARP H2	130	130	PAL-N H PICTURE QUALITY SETTING 2 (TV)	NOT USED
	PAL-N AV SHARP H2	150	150	PAL-N H PICTURE QUALITY SETTING 2 (COMPOSITE, S VIDEO)	NOT USED
DVP10	525I CONT	144	144	525I IMAGE SETTING (TV)	NOT USED
	525I BRIGHT	122	122	525I BRIGHTNESS SETTING (TV)	NOT USED
	525I COLOR	78	78	525I COLOR DENSITY SETTING (TV)	NOT USED
	525I TINT	146	146	525I TINT SETTING (TV)	NOT USED
	525I SHARP V	100	100	525I V PICTURE QUALITY SETTING (TV)	NOT USED
	525I SHARP H1	150	150	525I H PICTURE QUALITY SETTING 1 (TV)	NOT USED
	525I SHARP H2	150	150	525I H PICTURE QUALITY SETTING 2 (TV)	NOT USED
	525P CONT	144	144	525P IMAGE SETTING (COMPOSITE, S VIDEO)	NOT USED
	525P BRIGHT	122	122	525P BRIGHTNESS SETTING (COMPOSITE, S VIDEO)	NOT USED
	525P COLOR	78	78	525P COLOR DENSITY SETTING (COMPOSITE, S VIDEO)	NOT USED
	525P TINT	146	146	525P TINT SETTING (COMPOSITE, S VIDEO)	NOT USED
	525P SHARP V	130	130	525P V PICTURE QUALITY SETTING (COMPOSITE, S VIDEO)	NOT USED
	525P SHARP H1	120	120	525P H PICTURE QUALITY SETTING 1 (COMPOSITE, S VIDEO)	NOT USED
	525P SHARP H2	120	120	525P H PICTURE QUALITY SETTING 2 (COMPOSITE, S VIDEO)	NOT USED
DVP11	625I CONT	144	144	625I IMAGE SETTING (TV)	NOT USED
	625I BRIGHT	122	122	625I BRIGHTNESS SETTING (TV)	NOT USED
	625I COLOR	78	78	625I COLOR DENSITY SETTING (TV)	NOT USED
	625I TINT	146	146	625I TINT SETTING (TV)	NOT USED
	625I SHARP V	100	100	625I V PICTURE QUALITY SETTING (TV)	NOT USED
	625I SHARP H1	150	150	625I H PICTURE QUALITY SETTING 1 (TV)	NOT USED
	625I SHARP H2	150	150	625I H PICTURE QUALITY SETTING 2 (TV)	NOT USED
	625P CONT	144	144	625P IMAGE SETTING (TV)	NOT USED
	625P BRIGHT	122	122	625P BRIGHTNESS SETTING (TV)	NOT USED
	625P COLOR	78	78	625P COLOR DENSITY SETTING (TV)	NOT USED
	625P TINT	146	146	625P TINT SETTING (TV)	NOT USED
	625P SHARP V	130	130	625P V PICTURE QUALITY SETTING (TV)	NOT USED
	625P SHARP H1	120	120	625P H PICTURE QUALITY SETTING 1 (TV)	NOT USED
	625P SHARP H2	120	120	625P H PICTURE QUALITY SETTING 2 (TV)	NOT USED
DVP12	1125I CONT	144	144	1125I IMAGE SETTING (TV)	NOT USED
	1125I BRIGHT	122	122	1125I BRIGHTNESS SETTING (TV)	NOT USED
	1125I COLOR	78	78	1125I COLOR DENSITY SETTING (TV)	NOT USED
	1125I TINT	146	146	1125I TINT SETTING (TV)	NOT USED
	1125I SHARP V	100	100	1125I V PICTURE QUALITY SETTING (TV)	NOT USED
	1125I SHARP H1	100	100	1125I H PICTURE QUALITY SETTING 1 (TV)	NOT USED
	1125I SHARP H2	100	100	1125I H PICTURE QUALITY SETTING 2 (TV)	NOT USED
	750P CONT	144	144	750P IMAGE SETTING (TV)	NOT USED
	750P BRIGHT	122	122	750P BRIGHTNESS SETTING (TV)	NOT USED
	750P COLOR	78	78	750P COLOR DENSITY SETTING (TV)	NOT USED
	750P TINT	146	146	750P TINT SETTING (TV)	NOT USED
	750P SHARP V	100	100	750P V PICTURE QUALITY SETTING (TV)	NOT USED
	750P SHARP H1	100	100	750P H PICTURE QUALITY SETTING 1 (TV)	NOT USED
	750P SHARP H2	100	100	750P H PICTURE QUALITY SETTING 2 (TV)	NOT USED

Downloaded from www.Manualslib.com manuals search engine

DEFAULT CHART OF ADJUSTMENT PROCESS TUNER ITEMS

Page No.	Item	Initial Value		Function	Response precautions on servicing (Do not change other items than designated.)
		13inch	15inch		
BASIC SETTINGS					
TUNER1	AFT UP	1.80	1.80	AFT VOLTAGE REFERENCE LEVEL (ALL BANDS)	NOT USED
	AFT DOWN	1.20	1.20	AFT VOLTAGE REFERENCE LEVEL (ALL BANDS)	NOT USED
	LSYNC	150	150	SYNC JUDGMENT THRESHOLD (TV)	NOT USED
	HSYNC	162	162	SYNC JUDGMENT THRESHOLD (TV)	NOT USED
	LSYNC2	150	150	SYNC JUDGMENT THRESHOLD (FOR TV AFT CHANNEL (1-CH) SELECT)	NOT USED
	HSYNC2	162	162	SYNC JUDGMENT THRESHOLD (FOR TV AFT CHANNEL (1-CH) SELECT)	NOT USED
	AVSYNC	1	1	SYNC DETERMINATION THRESHOLD (EXTERNAL INPUT)	
	COMPSYNC	3	3	SYNC JUDGMENT THRESHOLD (COLOR DIFFERENCE INPUT)	NOT USED
	EDS TEST	10	10	DURATION UNTIL JUDGMENT OF NO EDS TIME DATA (SECONDS)	NOT USED
TUNER2	AFT FARTIME	50	50	CHANNEL PRESET TIME ADJUSTMENT 1	NOT USED
	AFT NEARTIME	30	30	CHANNEL PRESET TIME ADJUSTMENT 2	NOT USED
	AFT NEARTIME	10	10	CHANNEL PRESET TIME ADJUSTMENT 3	NOT USED
	AFT 1STEPTIME	10	10	CHANNEL PRESET TIME ADJUSTMENT 4	NOT USED
	AFT CSYNCTIME	50	50	CHANNEL PRESET TIME ADJUSTMENT 5	NOT USED
	SYNC ON	10	10	CHANNEL PRESET SYNC JUDGMENT, CONTINUOUS MATCHING TIMES(CH SEARCH, AIR/CABLE JUDGMENT, CLOCK SYNC JUDGMENT)	NOT USED
	SYNC WIDTH	1	1	CHANNEL PRESET SYNC JUDGMENT, THRESHOLD (SYNC PROVIDED JUST AFTER THE MAXIMUM-TO-MINIMUM DIFFERENCE COMES SMALLER)	NOT USED

DEFAULT CHART OF OTHER ADJUSTMENT PROCESS ITEMS

Page No.	Item	Initial Value		Function	Response precautions on servicing (Do not change other items than designated.)
		13inch	15inch		
OTHERS					
OTHERS1	DAC DATA 00---	—	—	DAC-RELATED GENERAL-PURPOSE VARIABLE SETTINGS	NOT USED
	L ERROR WAIT	15s	15s	LAMP ERROR DETECT WAIT TIME	NOT USED
	L ERROR H TIME	1.0s	1.0s	LAMP ERROR DETECT TIME	NOT USED
	TV AUTO GAIN	OFF	OFF	AUTO GAIN SETTING FOR TV	NOT USED
	PWM FREQ	150	150	DIMMER FREQUENCY SETTING (IN HZ)	NOT USED
	PWM DUTY	0	0	DIMMER DUTY SETTING	NOT USED
	OPC THRESHOLD	24	24	INPUT LEVEL THRESHOLD FROM BRIGHTNESS SENSOR STOP MODE TO OPERATION MODE	NOT USED
	HOTEL POWERFIX	OFF	OFF	USED FOR FIXED HOTEL MODE POWER ON	NOT USED
	COMP SYSTEM	AUTO	AUTO	COMPONENT SIGNAL SELECT IN ADJUSTMENT PROCESS	NOT USED
	REMOCON CODE DISPLAYED AT THE BOTTOM				
OTHERS					
OTHERS2	CLOSED CAPTION	15	15	CLOSED CAPTION THRESH LEVEL	NOT USED
	AUTO CLOCK DISPLAYED ON THE 2ND, 3RD AND 4TH LINES FROM BOTTOM FOR US-DESTINED MODELS				

Downloaded from www.Manualslib.com manuals search engine

PUBLIC MODE SETTING PROCEDURE

1. How to start Public Mode

- There are the following two ways to get the public mode setup screen displayed.

① 1) Press the "INPUT" and "VOL (+)" keys on the set at once and turn on the power.
2) Get the password input screen displayed.

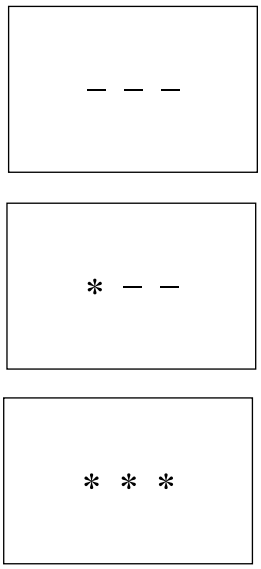

Procedure

- The input starts with the leftmost digit.
- Use the numeric keys [1] thru [9] and [10/0] keys on the remote controller. The other keys are not acceptable.
- With a numeric-key input, "–" will change to "*". The input position will move one digit to the right.
- With all the 3 digits entered, the password will be verified.

3) The 3-digit password is now verified.
The password [0] [2] [7] provides for the public mode screen. (This screen comes on with whatever adjustment process settings.)
With any other passwords, the screen changes to the normal mode.

② In the adjustment process mode, turn on "PUBLIC MODE". Also press the "CH (∧)" and "VOL (+)" keys on the set at once and turn on the power.

Downloaded from www.Manualslib.com manuals search engine

2. How to exit Public Mode

There are the following ways to quit the public mode setup screen.

- Turn off "PUBLIC MODE" in the adjustment process mode. (☆) ← This way alone is not for quitting the setup screen, but for quitting the mode itself.
- Turn off the power with the "POWER" key. (★)
- Select "ENTER". (★)
- Move the cursor to "RESET" and press the "FLASHBACK" key. (Back to the normal mode screen)(☆)

★ ... "PUBLIC MODE" stays on in the adjustment process mode.
☆ ... The settings will be back to the factory ones.

3. Public Mode Setting Values

- With the factory settings made, the public mode settings get initialized. (The adjustment process remains intact.)

4. Public Mode Menu

The guidance is not displayed onscreen.
Setup procedure

- To move the cursor up and down, use the "cursor UP/DOWN" key (remote controller) and "CH (∧)/(∨)" key (remote controller and set).
- To change the settings, use the "cursor RIGHT/LEFT" key (remote controller) and "VOL (+)/(–)" key (remote controller and set).
- To save new settings, keep the cursor at "Enter" and use the "cursor RIGHT/LEFT" key (remote controller) and "VOL (+)/(–)" key (remote controller and set).

Public mode	
Maximum volume	[60]
Volume fixed	[Variable]
Volume fixed level	[20]
RC button	[Respond]
Panel button	[Respond]
Menu button	[Respond]
On screen display	[Yes]
Input mode start	[Normal]
Input mode fixed	[Variable]
Reset	
Enter	

Downloaded from www.Manualslib.com manuals search engine

5. On Setting Items

* "EZ-SETUP" discussed below indicates "EZ-SETUP after the first power-on".

(1) MAXIMUM VOLUME

Selection	Adjustment from 1 to 60 (no loop)
Default	60
Explanation	Sound volume can not be adjusted higher than the preset value.
Limit in Setting	• When the sound volume is set lower than 59, only figures are displayed and the sound volume bar is not displayed. • The maximum sound volume for ON-timer (Wake up timer) is limited also to the preset value.
Exception	• In the item "VOLUME" of adjustment process, the sound volume can be set freely irrespective of this setting.
Remarks	• Setting is valid only for the speakers of the unit. (As for the headphone, the sound volume can be set up to 60 irrespective of the limit.) • In line output (sound volume variable), the sound volume can be adjusted from -60 to 0 irrespective of pre-adjusted value. • When the sound volume is set higher than the MAX setting by the adjusting process or headphone, the sound volume control operation is prohibited for turn-up and the sound volume should be turned down to MAX in this state.

(2) VOLUME FIXED

Selection	Selection between "Variable" and "Fixed" (loop provided)
Default	Variable
Explanation	Sound volume is fixed and made invariable.
Limit in Setting	• The sound volume for the ON-timer (Wake up timer) is fixed also without display of menu. Besides, the setting is made impossible. (Basically, the menu is not displayed.) • The following keys become invalid: • Sound volume Up/Down (VOL +/-) [for both remote control and the unit] • Mute (MUTE)
Exception	• In the item "VOLUME" of adjustment process, the sound volume can be set freely irrespective of this setting.
Remarks	• In "Variable" setting, the sound volume had been conventionally set at 1 but this operation has been abolished (and follows the last memory). • The sound volume for the ON-time is not set at 1 either and the sound volume set value of the ON-timer before executing the hotel mode is held. • Setting is valid only for the speakers of the unit. (As for the headphone, the sound volume can be set up to 60 irrespective of the limit.) • In line output (sound volume variable), the sound volume can be adjusted from -60 to 0 irrespective of pre-adjusted value. • As for sound volume fixing and sound volume MAX level, the sound volume fixing has priority. • Once the sound volume has been changed by adjustment process or headphone, it should be set back to the sound volume preset by sound volume fixing level when the adjustment process ends or when the headphone is removed.

Downloaded from www.Manualslib.com manuals search engine

(3) VOLUME FIXED LEVEL

Selection	Adjustment from 1 to 60 (no loop)
Default	20
Explanation	The sound volume to be fixed by "Volume fixed" is determined.
Limit in Setting	None
Exception	None
Remarks	Setting is valid only when "Volume fixed" is selected for "fixed". This must be confirmed actually by changing also the sound volume in accordance with setting.

(4) R/C BUTTON

Selection	Selection between "Respond" , "Limited" and "No respond" (loop provide)
Default	Respond
Explanation	Keys acceptable by remote control are limited or reception of keys can be prohibited.
Limit in Setting	①In "limited" setting, only power ON/OFF, sound volume ▲▼, tuning ▲▼ and BACKLIGHT (brightness sensor) are accepted. ②In "No respond" setting, all the keys (including the power key) are not accepted.
Exception	• Adjustment process, factory setting, inspection process and hotel only keys are valid irrespective of setting. • All the keys can be used in adjustment process, inspection mode and hotel menu irrespective of setting. • All the keys can be used also in the initial EZ-Setup after power-ON irrespective of setting.
Remarks	

(5) PANEL BUTTON

Selection	Selection between "Respond" and "No respond" (loop provide)
Default	Respond
Explanation	All the operations by keys (except the power key) of the unit can be invalidated.
Limit in Setting	
Exception	• Inspection mode and hotel menu mode can be started irrespective of setting. • All the keys can be used in adjustment process, inspection mode and hotel menu irrespective of setting. • In U.S.A model, all the keys can be used also in the initial EZ-Setup after power-ON irrespective of setting.
Remarks	

(6) MENU BUTTON

Selection	Selection between "Respond" and "No respond" (loop provide)
Default	Respond
Explanation	In "No respond" setting, the menu operation by the menu key of the remote control and the menu key of the unit are invalidated.
Limit in Setting	• ON-timer (Wakeup Timer) is turned OFF. • The following keys become invalid. Wake-up timer and clock setting keys and all of the direct change keys to menu display
Exception	• Inspection mode and hotel menu mode can be started irrespective of setting. • All the keys can be used in adjustment process, inspection mode and hotel menu irrespective of setting. • All the keys can be used also in the initial EZ-Setup after power-ON irrespective of setting.
Remarks	

Downloaded from www.Manualslib.com manuals search engine

(7) ON SCREEN DISPLAY

Selection	Selection between "Yes" , "Limited" (loop provide)
Default	Yes
Explanation	The following OSD displays are made ineffective. Displays of menu group, channel call, sound volume bar and direct key call
Limit in Setting	• ON-timer (Wake-up timer) is cleared and set to "OFF". • Set time of the OFF-timer (SLEEP TIMER) is cleared. • Setting of the no-signal power-OFF (AUTO POWER OFF) is cleared to "OFF". • Setting of the no-operation power-OFF is cleared to "OFF". • Keys falling under any of the following items become invalid. ①Appearance of screen changes and the sound changes. ②Personal functions which are hard to restore. Ex.) Screen display, menu, OFF-timer, ON-timer, AV MODE, screen size switching, clock setting, treble emphasis, AUDIO ONLY, sound changeover, LANGUAGE, CLOSED CAPTION
Others	• Simple input switching is generated. Those which are restored soon after leaving as they are and may be requested for change by customer are not prohibited. Ex.) Brightness sensor (BACKLIGHT) and PIC. FLIP
Exception	• Such a caution which is displayed independently is displayed as it is. Non-responding signal caution, V-Chip caution and power-ON fixing caution
Remarks	• In "No" setting, the setting of "SOUND ONLY MODE" is changed to "OFF" and selecting operation is made prohibited. • When CC has already been ON, CLOSED CAPTION is displayed.

(8) INPUT MODE START

Selection	Selection between "Normal" , "TV (CH∗)" "COMPONENT" "AV1" and "AV2" (loop provide)
Default	Normal
Explanation	In power-ON, the input source to be started or channel can be set. (In standard mode, the operation follows the last memory.)
About options	• All the input sources in the model are made selectable. • When the input/output switchable input source is selected and the input source is set to output, the setting of input/output switching is changed to input at the execution of hotel menu. In addition, the input/output switching by menu is prohibited. • In TV mode, the display of all channels is stopped and it is treated as an input source. At this time, the channel to be set follows the last memory and the content of the last memory is included in the notation by options. Ex.) TV (CH2), TV (CH4) etc. • The order of appearance of options in the hotel menu should agree with the order of toggles by input switching key.
Limit in Setting	• The display of channel setting menu and the channel setting operation are prohibited (except for MCL).
Exception	• In the start by "ON-timer (Wake-up timer)", the channel set by ON-timer (Wake-up timer) has priority.
Remarks	• In setting at "Normal", the setting of "Input mode fixed" is changed to "Variable" and selection should be prohibited.

(9) INPUT MODE FIXED

Selection	Selection between "Variable" and "Fixed" (loop provide)
Default	– (Variable)
Explanation	The input mode is fixed at the input source or the channel set at the "Input mode start" in 9 and other input sources and channels can be made non-selectable.
Limit in Setting	• With the execution of hotel mode, the input source is forced to change to that set by "Input mode start" and the channel switching and input switching are prohibited thereafter. • ON-timer's (Wake-up timer) channel items are not displayed or the operation is prohibited. (Basically, they are not displayed.) • The following keys are invalidated. CH ▲▼, direct tuning button, FLASHBACK, input ∗However, the keys (input switching and CH ▲▼ keys) of the unit for menu operation remain valid.
Exception	None
Remarks	• In the following case, setting is cancelled and mode is changed to "Variable". ①When the setting of "Input mode start" is set to "Standard (Normal)"

Downloaded from www.Manualslib.com manuals search engine

TROUBLE SHOOTING TABLE

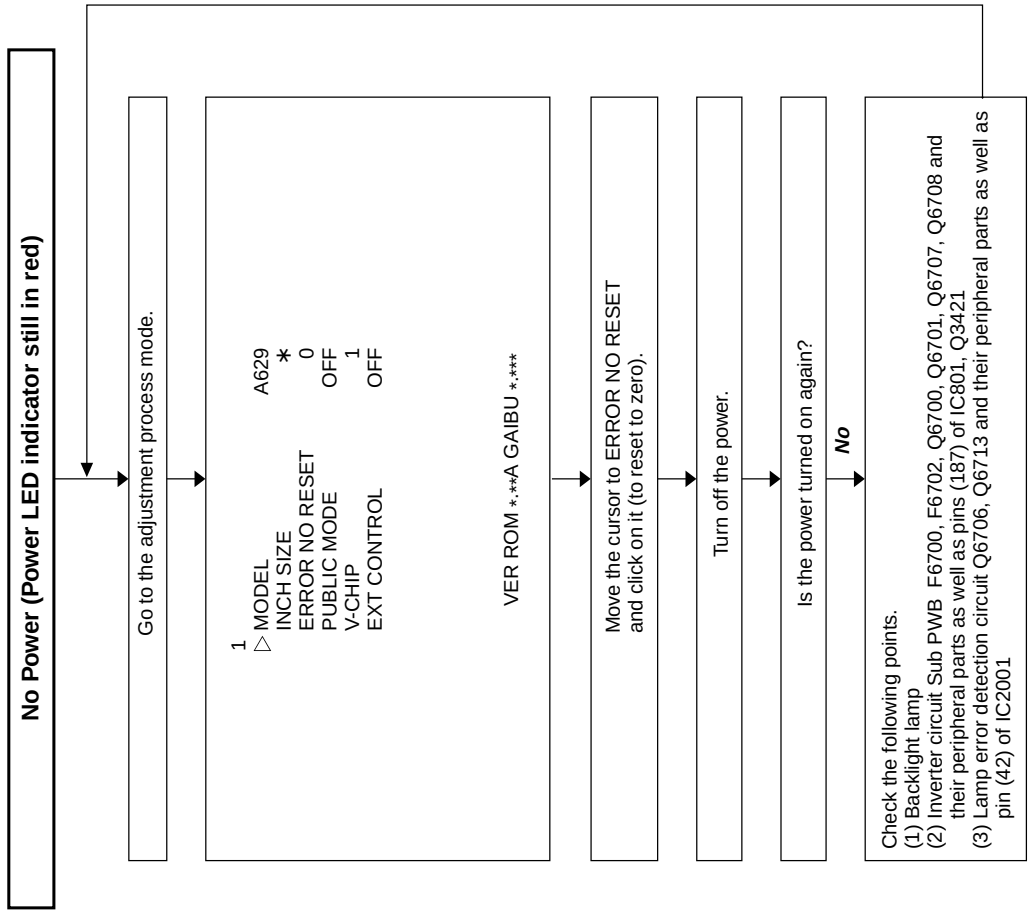

Note:
This model is equipped with the lamp error detection function that detects the current flowing into the fluorescent lamp and protects the backlight lamp drive circuit.
If a lamp error is detected, the microprocessor interrupts the unit and the ERROR NO RESET setting will go up.
When the ERROR NO RESET setting has reached "5", the microprocessor turns and keeps off the unit's power. To resume the power, take the above procedure to clear the ERROR NO RESET setting.

Note:
*:13 (LC-13B8U)
:15 (LC-15B8/B9U)

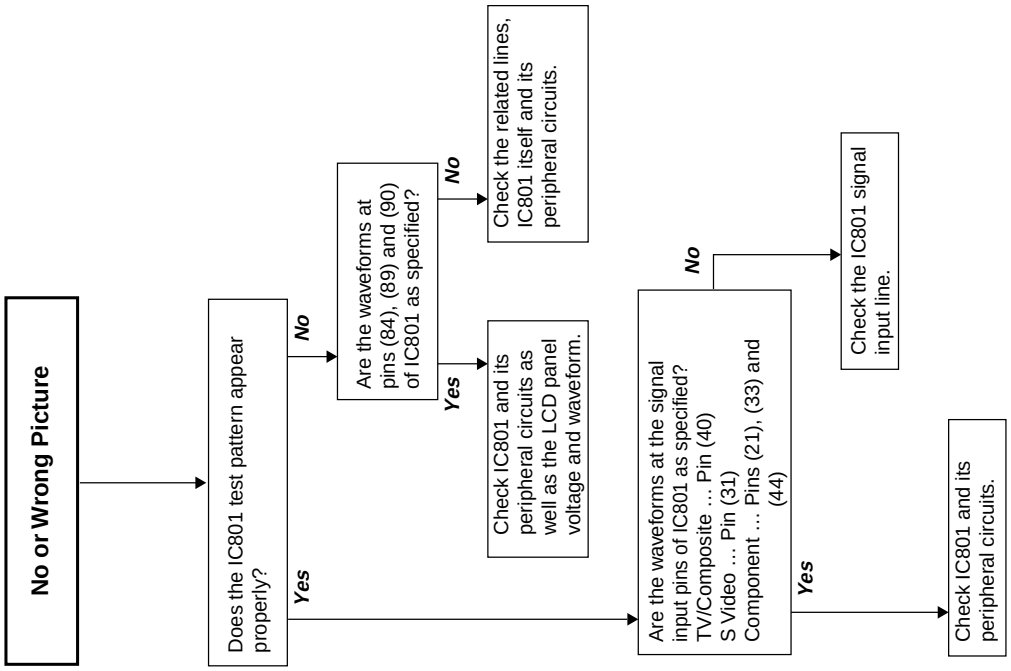

Downloaded from www.Manualslib.com manuals search engine

TROUBLE SHOOTING TABLE (Continued)

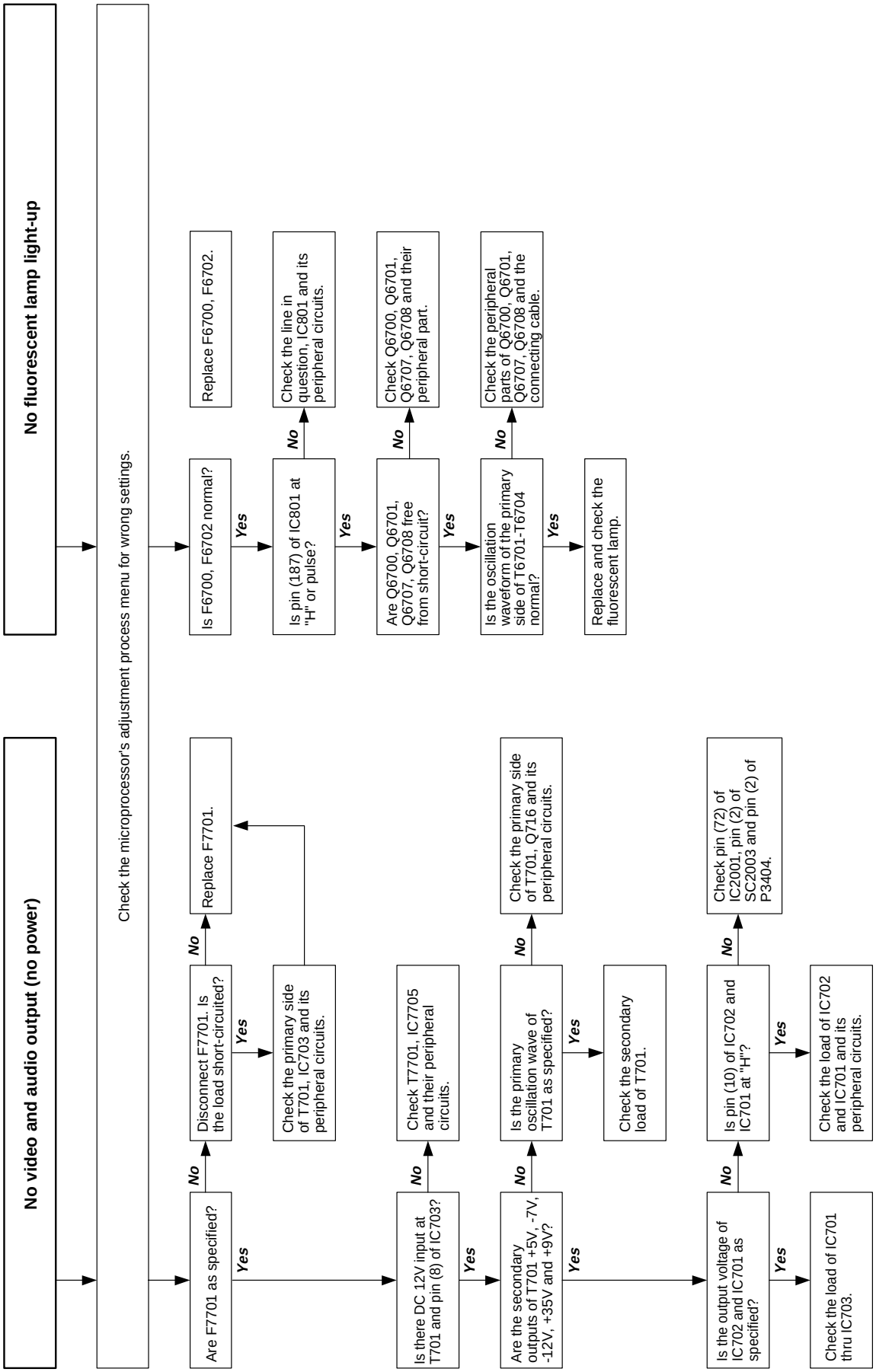

Downloaded from www.Manualslib.com manuals search engine

TROUBLE SHOOTING TABLE (Continued)

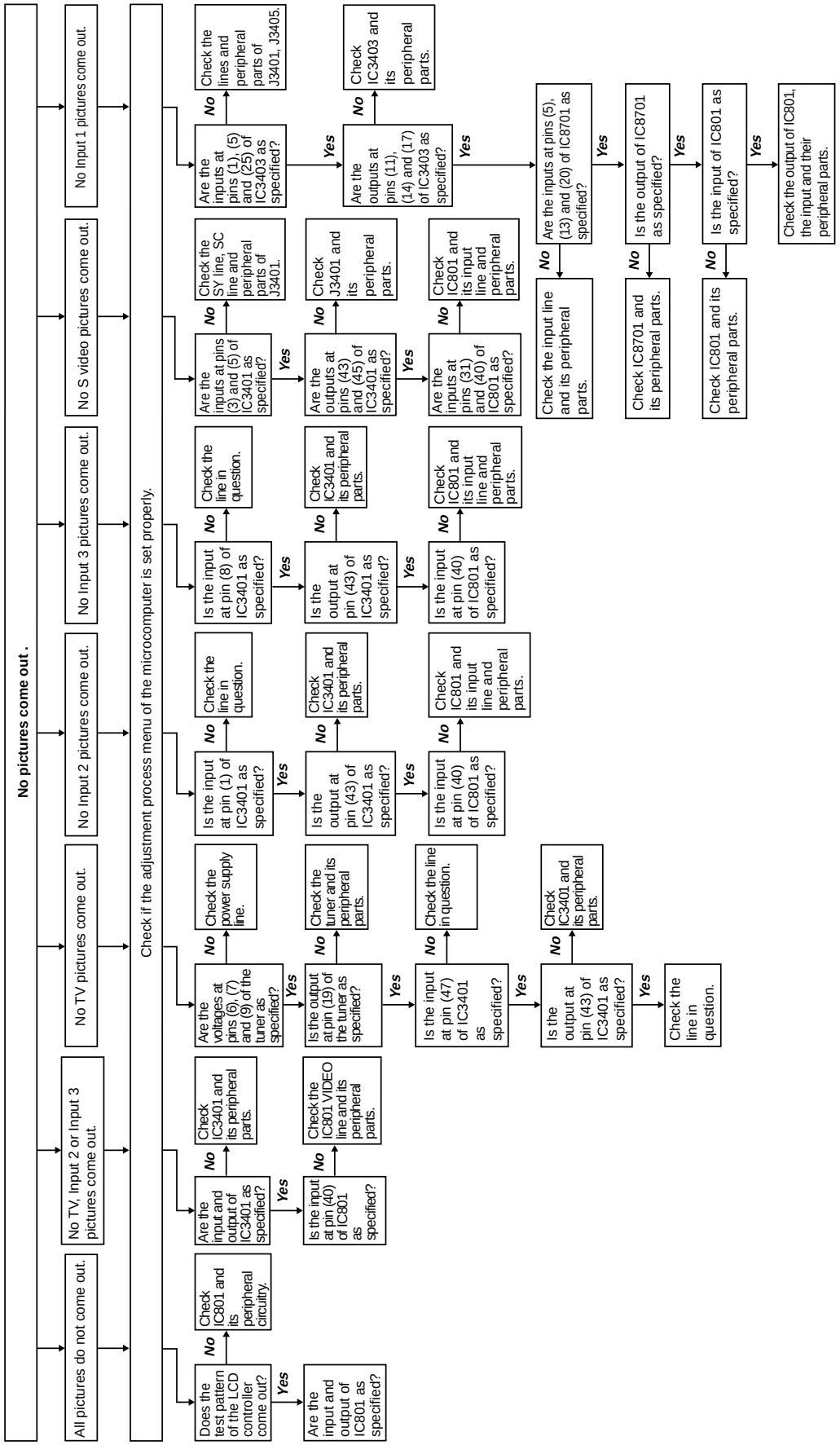

Downloaded from www.Manualslib.com manuals search engine

TROUBLE SHOOTING TABLE (Continued)

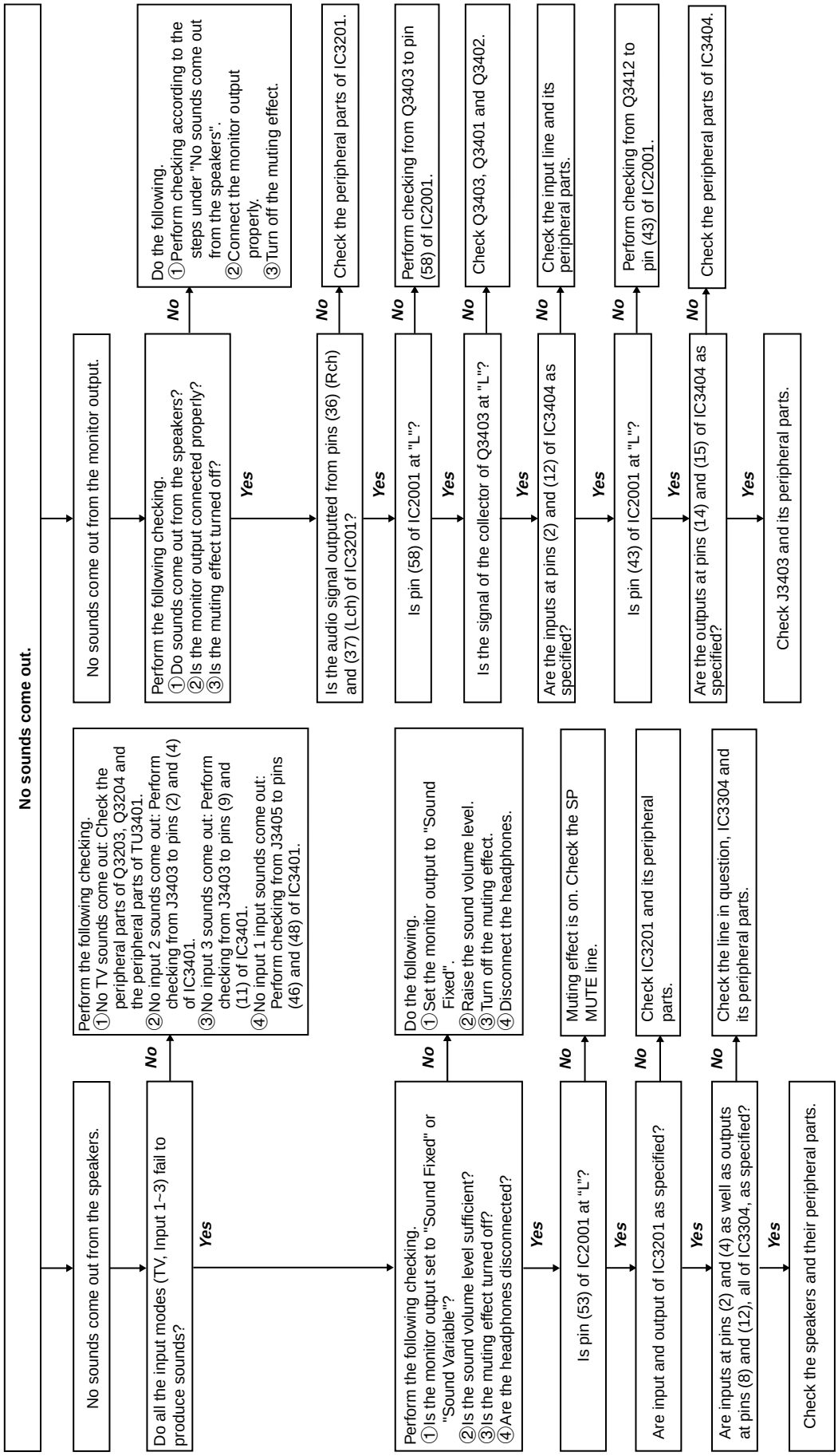

Downloaded from www.Manualslib.com manuals search engine

TROUBLE SHOOTING TABLE (Continued)

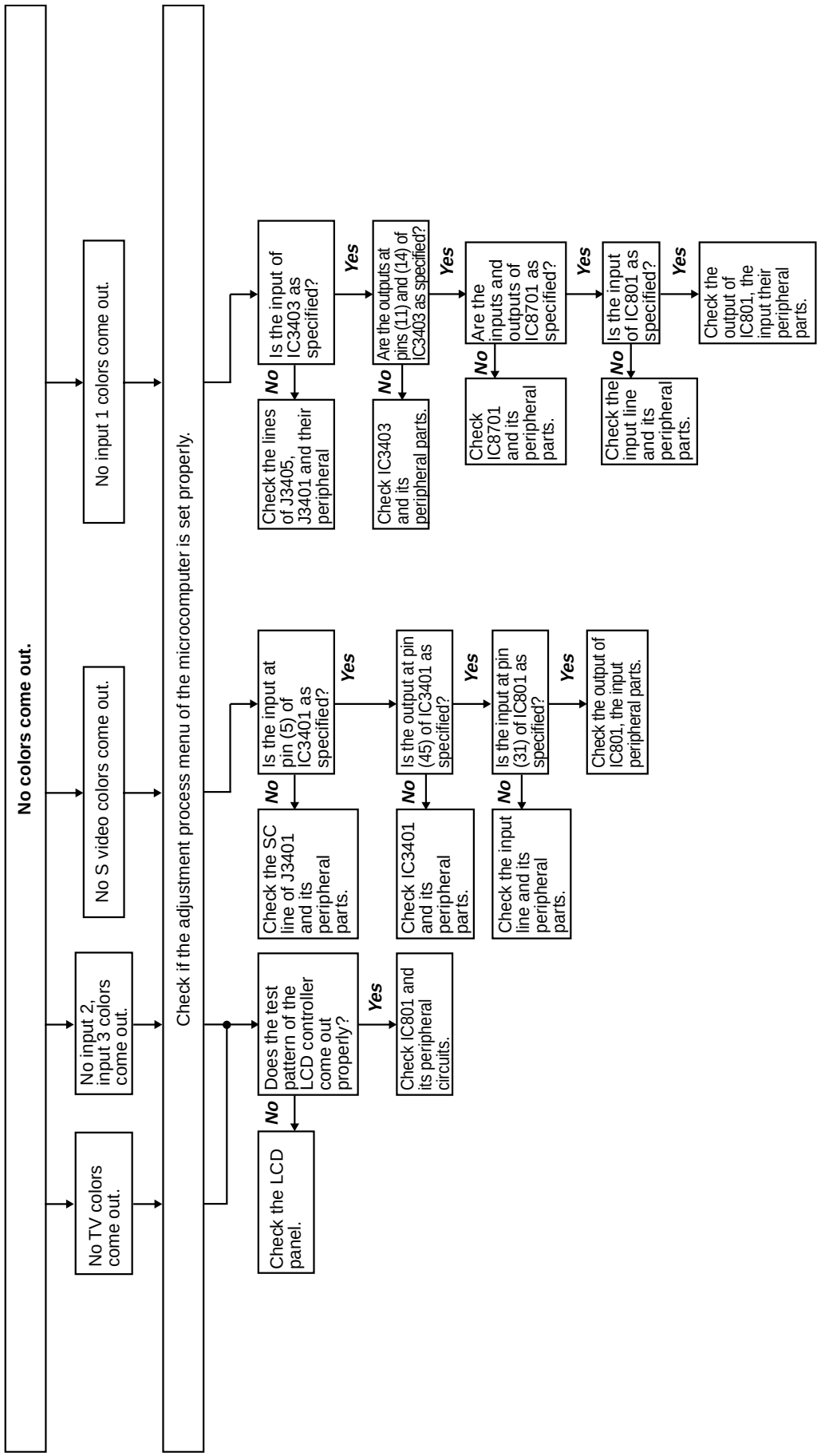

Downloaded from www.Manualslib.com manuals search engine

MAJOR IC INFORMATION

1. IC2001 (RH-iXA629WJN1Q)
   1-1.Pin Connections

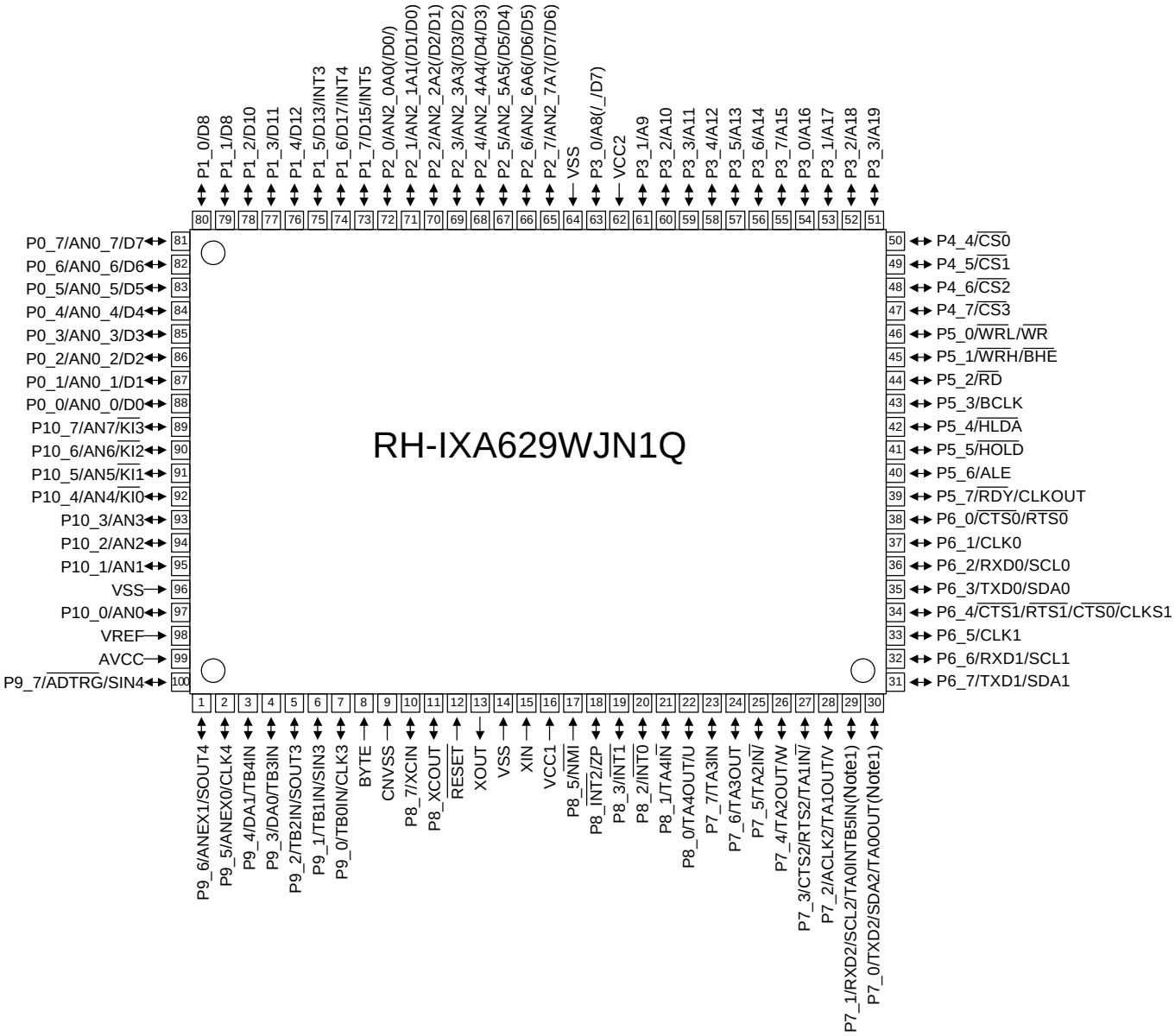

Note 1: N channel open drain outputs

Pin Connections (Top View)

Downloaded from www.Manualslib.com manuals search engine

1-2. Pin Functions

Pin No.	Pin Name	I/O	Pin Name	Function
1	P96/ANEX1/Sout4	O		
2	P95/ANEX0/CLK4	O		
3	P94/DA1/TB4in	I	PC-H	PC signal HS frequency judgment
4	P93/DA0/TB3in	I	D_FIL	Component filter switching DA (No function)
5	P92/TB2in/Sout3	I	PC-V	PC signal VS frequency judgment
6	P91/TB1in/Sin3	I	CSYNC	Composite sync signal
7	P90/TB0in/CLK3	I	IREM1	Remote control signal
8	BYTE	I	BYTE	Connected to GND
9	CNVss	I	CNVss	Connected to GND (connected to Vcc1 for CNVSS at flash write)
10	P87/Xcin	I	Xcin	32kHz quartz oscillator (for clock count)
		O	P87	(No function)
11	P86/Xcout	O	Xcout	32kHz quartz oscillator (for clock count)
		O	P86	(No function)
12	RESET	I	RESET	Microprocessor reset at "L"
13	Xout	O	Xout	System clock output
14	Vss	I	Vss	GND
15	Xin	I	Xin	System clock input
16	Vcc1	I	Vcc1	VDD (+3.3V)
17	P85/NMI	I	NMI	(Connected to Vcc1 for NMI at flash write)
18	P84/INT2	O		
19	P83/INT1	I	PSWin	Main power monitor
20	P82/INT0	I	VSYNC	VSYNC signal input
21	P81/TA4in	O	RS_POWER	RS, DS control
22	P80/TA4out	O	AC_Ctrl	AC adaptor power consumption control
23	P77/TA3in	O	DAC1CS	Gradation control IC chip select
24	P76/TA3out	O		
25	P75/TA2in	O		
26	P74/TA2out	O		
27	P73/CTS2_/RTS2_/TA1in	I/O	SDA2	Serial data line 2 for I2C bus 2 system
28	P72/CLK2/TA1out	I/O	SCL2	Serial clock line 2 for I2C bus 2 system (EEPROM, AV SW(J), BS TUNER)
29	P71/RxD2/SCL2/TA0in/TB5in	I/O	SCL1	Serial clock line 1 for I2C bus 2 system (others, AV SW(not J))
30	P70/TxD2/SDA2/TA0out	I/O	SDA1	Serial data line 1 for I2C bus 2 system
31	P67/TxD1/SDA1	O	TxD	(TxD at flash write)
32	P66/RxD1/SCL1	O	RxD	(RxD at flash write)
33	P65/CLK1	O	SCLK	(Clock input at flash write)
34	P64/CTS1/RTS1/CTS0/CLKS1	O	BUSY	(Busy output at flash write)
35	P63/TxD0/SDA0	O	MPWEL	Data signal input for DVP 4-line serial (MPWEL)
36	P62/RxD0/SCL0	I	MPOE	Data output signal for DVP 4-line serial (MPOE)
37	P61/CLK0	O	MPWEH	Clock for DVP 4-line serial (MPWEH)
38	P60/CTS0/RTS0	O		
39	P57/RDY/CLKout	O	MAINSW	LED power control
40	P56/ALE	O		
41	P55/HOLD	I	POWin(EPM)	DC/DC start detect (connected to Vss for EPM at flash write)
42	P54/HLDA	I(O)	L_ERR	Fluorescent lamp error detect
43	P53/BCLK	O	S IN/OUT	Audio input/output select
44	P52/RD	O	COMP	AV selector switch
45	P51/WRH/BHE	O	TIMER(RLED)	On timer LED control (power RLED control for overseas destinations)
46	P50/WRL/WR	I	MRDY(CE)	I2C bus open connection detect (connected to Vcc2 for CE at flash write)
47	P47/CS3	O	LEDPOW(GLED)	Power LED control (common with sub-power control in Japan) (power GLED control for overseas destinations

Downloaded from www.Manualslib.com manuals search engine

Pin No.	Pin Name	I/O	Pin Name	Function
48	P46/CS2	O		
49	P45/CS1	O	S_SEL	AV selector switch
50	P44/CS0	O	VSHOUT	Panel gate driver voltage control
51	P43/A19	O		
52	P42/A18	O	HP MUTE	Headphones mute (at "H")
53	P41/A17	O	SP MUTE1	Main speaker mute
54	P40/A16	O		
55	P37/A15	I	HP DET	Headphones detect
56	P36/A14	O	SSTBY	Amplifier power control (1-bit-dropout models)
57	P35/A13	I	VSH IN	Panel gate driver voltage confirm
58	P34/A12	O	LMUTE	Line out audio mute
59	P33/A11	O	V IN/OUT	Video input/output select
60	P32/A10	O	SRESET	Audio IC reset output
61	P31/A9	O		
62	Vcc2	I	Vcc2	Power input
63	P30/A8	O	TCON_OUT_CTL	DVP control output control
64	Vss	I	Vss	GND
65	P27/AN27/A7	O	V_SEL	AV selector switch
66	P26/AN26/A6	O	TV_SEL	AV selector switch
67	P25/AN25/A5	O	BUS SELECT H(I2C)	DVP I2C/4-line communication system select (H: I2C control, L: Serial control)
68	P24/AN24/A4	O	MPCE	DVP 4-line serial chip enable (MPCE)/DVP slave address select
69	P23/AN23/A3	O	OPCLED	OPC LED light-up
70	P22/AN22/A2	O	INV_POW	Separately-excited inverter power control (with separately-excited-type models only)
71	P21/AN21/A1	O	VGH	Panel power control
72	P20/AN20/A0	O	POWout	DC/DC control output
73	P17/D15/INT5	I	ADPPOW	Adaptor ON/OFF input
74	P16/D14/INT4	O	DACOUTCON	Gradation control IC output control (gradation IC)
75	P15/D13/INT3	O	MP_RCS	Temperature sensor chip select
76	P14/D12	I/O	MP_RDA	Temperature sensor data input
77	P13/D11	O		
78	P12/D10	O	MP_DA	Gradation control IC data output
79	P11/D9	O	MP_CLK	Temperature sensor or gradation control IC clock output
80	P10/D8	O	DDC_RESET	Video IC reset output (Renesas DVP, 3D YC)
81	P07/AN07/D7	I	KEY4	Key input 4
82	P06/AN06/D6	I	KEY5	Key input 5
83	P05/AN05/D5	O	VLS	Panel & gradation IC power control
84	P04/AN04/D4	O		
85	P03/AN03/D3	O		
86	P02/AN02/D2	O	SHORT_DET	Over-current protection detect
87	P01/AN01/D1	I	INCH2	Screen size ID port 2
88	P00/AN00/D0	I	INCH1	Screen size ID port 1
89	P107/AN7/KI3	I	AFT	AFT voltage input
90	P106/AN6/KI2	—		
91	P105/AN5/KI1	O I	KEY1	Key input 1
92	P104/AN4/KI0	I	KEY2	Key input 2
93	P103/AN3	O		
94	P102/AN2	I	OPC_IN	OPC sensor level input
95	P101/AN1	O		
96	AVss	I	AVss	Connected to GND
97	P100/AN0	O		
98	VREF	I	VREF	Connected to +3.3V
99	AVcc	I	AVcc	Connected to +3.3V
100	P97/ADtrg/Sin4	O		

Downloaded from www.Manualslib.com manuals search engine

2. IC801(RH-iXB150WJZZQ)

2-1. Pin Connections

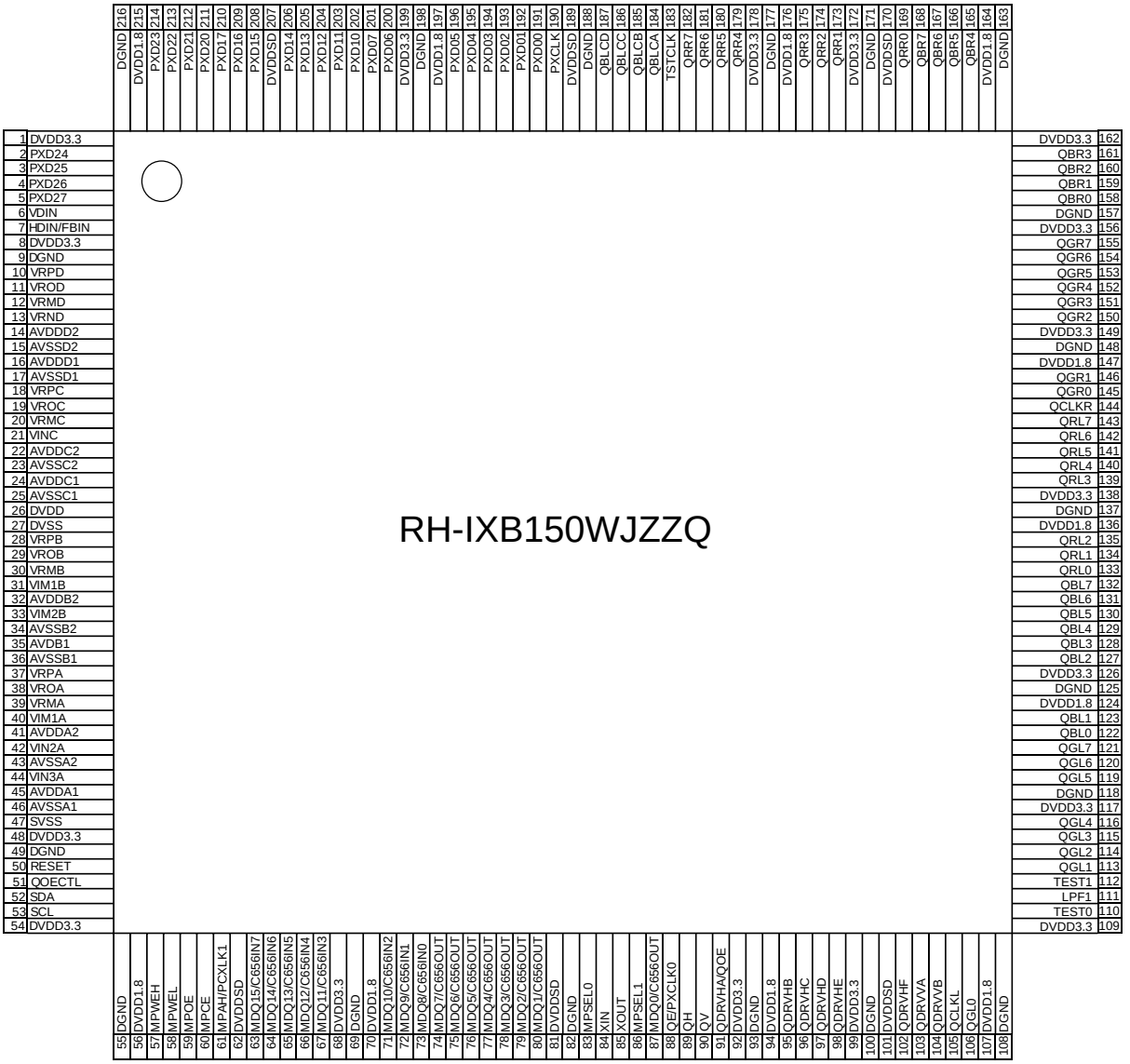

Pin Connections (Top View)

Downloaded from www.Manualslib.com manuals search engine

2-2. Pin Functions

Pin No.	Pin name	Function	Pin status
1	DVDD33	Digital 3.3V power	
2	PXD24	Pixel data signal (C) input/output	Pull-up when not used
3	PXD25	Pixel data signal (C) input/output	Pull-up when not used
4	PXD26	Pixel data signal (C) input/output	Pull-up when not used
5	PXD27	Pixel data signal (C) input/output	Pull-up when not used
6	VDIN	Vertical sync signal input/output	Pull-up when not used
7	HDIN/FBIN	Horizontal sync signal input/output/FB (SCART) signal input	Pull-up when not used
8	DVDD33	Digital 3.3V power	
9	DGND	Digital GND	
10	VRPD	ADC (Dch) VRT terminal (0.1µF capacitor connected)	
11	VROD	ADC (Dch) VRM terminal (0.1µF capacitor connected)	
12	VRMD	ADC (Dch) VRB terminal (0.1µF capacitor connected)	
13	VIND	ADC (Dch) analog input 1 (CVBS)	
14	AVDDD2	ADC analog 3.3V power	
15	AVSSD2	ADC analog GND	
16	AVDDD1	ADC analog 3.3V power	
17	AVSSD1	ADC analog GND	
18	VRPC	ADC (Cch) VRT terminal (0.1µF capacitor connected)	
19	VROD	ADC (Cch) VRM terminal (0.1µF capacitor connected)	
20	VRMC	ADC (Cch) VRB terminal (0.1µF capacitor connected)	
21	VINC	ADC (Cch) analog input 1 (COMP-Pr/R)	
22	AVDDC2	ADC analog 3.3V power	
23	AVSSC2	ADC analog GND	
24	AVDDC1	ADC analog 3.3V power	
25	AVSSC1	ADC analog GND	
26	DVDD	ADC digital 3.3V power	
27	DVSS	ADC digital GND	
28	VRPB	ADC (Bch) VRT terminal (0.1µF capacitor connected)	
29	VROD	ADC (Bch) VRM terminal (0.1µF capacitor connected)	
30	VRMB	ADC (Bch) VRB terminal (0.1µF capacitor connected)	
31	VIN1B	ADC (Bch) analog input 1 (YC-C)	
32	AVDDB2	ADC analog 3.3V power	
33	VIN2B	ADC (Bch) analog input 2 (COMP-Pb/B)	
34	AVSSB2	ADC analog GND	
35	AVDDB1	ADC digital 3.3V power	
36	AVSSB1	ADC digital GND	
37	VRPA	ADC (Ach) VRT terminal (0.1µF capacitor connected)	
38	VROD	ADC (Ach) VRM terminal (0.1µF capacitor connected)	
39	VRMA	ADC (Ach) VRB terminal (0.1µF capacitor connected)	
40	VIN1A	ADC (Ach) analog input 1 (CVBS1)	
41	AVDDA2	ADC analog 3.3V power	
42	VIN2A	ADC (Ach) analog input 2 (YC-Y)	
43	AVSSA2	ADC analog GND	
44	VIN3A	ADC (Ach) analog input 3 (COM-Y/G)	
45	AVDDA1	ADC analog 3.3V power	
46	AVSSA1	ADC analog GND	
47	SVSS	Analog guard ring GND	
48	DVDD33	Digital 3.3V power	
49	DGND	Digital GND	
50	RESET	Reset signal input	
51	QOECTL	Try state control for panel output line control signal '0': Normal output, '1': High impedance	
52	HDIN2	Line 2's HD input	Pull-up when not used
53	VDIN2	Line 2's VD input	Pull-up when not used
54	DVDD33	Digital 3.3V power	
55	DGND	Digital GND	
56	DVDD 18	Digital 1.8V power	
57	MPWEH	MPSEL0='1' setting (parallel bus): Write enable upper (negative polarity) MPSEL0='0' setting (4-line serial bus) MST: Serial clock input	Pull-up when not used

Downloaded from www.Manualslib.com manuals search engine

Pin No.	Pin name	Function	Pin status
58	MPWEL	MPSEL0='1' setting (parallel bus): Write enable lower (negative polarity) MPSEL0='0' setting (4-line serial bus) MSD: Serial data input	Pull-up when not used
59	MPOE	MPSEL0='1' setting (parallel bus): Output enable (negative polarity) MPSEL0='0' setting (4-line serial bus) MSQ: Serial data output	Pull-up when not used
60	MPCE	MPSEL0='1' setting (parallel bus): Chip enable (negative polarity) MPSEL0='0' setting (4-line serial bus) MSN: Serial select	Pull-up when not used
61	MPAH/PCXLK1	(Parallel bus) address latch enable (negative polarity)/ITU-R656 clock input	
62	DVDDSD	Digital 3.3V power	
63	MDQ15/C656IN7	MPSEL0='1' setting: Data input/output (address input) '0' setting: Microprocessor expander/ITU-R656 input	Pull-up when not used
64	MDQ14/C656IN6	MPSEL0='1' setting: Data input/output (address input) '0' setting: Microprocessor expander/ITU-R656 input	Pull-up when not used
65	MDQ13/C656IN5	MPSEL0='1' setting: Data input/output (address input) '0' setting: Microprocessor expander/ITU-R656 input	Pull-up when not used
66	MDQ12/C656IN4	MPSEL0='1' setting: Data input/output (address input) '0' setting: Microprocessor expander/ITU-R656 input	Pull-up when not used
67	MDQ11/C656IN3	MPSEL0='1' setting: Data input/output (address input) '0' setting: Microprocessor expander/ITU-R656 input	Pull-up when not used
68	DVDD3.3	Digital 3.3V power	
69	DGND	Digital GND	
70	DVDD1.8	Digital 1.8V power	
71	MDQ10/C656IN2	MPSEL0='1' setting: Data input/output (address input) '0' setting: Microprocessor expander/ITU-R656 input	Pull-up when not used
72	MDQ9/C656IN1	MPSEL0='1' setting: Data input/output (address input) '0' setting: Microprocessor expander/ITU-R656 input	Pull-up when not used
73	MDQ8/C656IN0	MPSEL0='1' setting: Data input/output (address input) '0' setting: Microprocessor expander/ITU-R656 input	Pull-up when not used
74	MDQ7/C656OUT7	MPSEL0='1' setting: Data input/output (address input) '0' setting: Microprocessor expander/ITU-R656 input	Pull-up when not used
75	MDQ6/C656OUT6	MPSEL0='1' setting: Data input/output (address input) '0' setting: Microprocessor expander/ITU-R656 input	Pull-up when not used
76	MDQ5/C656OUT5	MPSEL0='1' setting: Data input/output (address input) '0' setting: Microprocessor expander/ITU-R656 input	Pull-up when not used
77	MDQ4/C656OUT4	MPSEL0='1' setting: Data input/output (address input) '0' setting: Microprocessor expander/ITU-R656 input	Pull-up when not used
78	MDQ3/C656OUT3	MPSEL0='1' setting: Data input/output (address input) '0' setting: Microprocessor expander/ITU-R656 input	Pull-up when not used
79	MDQ2/C656OUT2	MPSEL0='1' setting: Data input/output (address input) '0' setting: Microprocessor expander/ITU-R656 input	Pull-up when not used
80	MDQ1/C656OUT1	MPSEL0='1' setting: Data input/output (address input) '0' setting: Microprocessor expander/ITU-R656 input	Pull-up when not used
81	DVDDSD	Digital 3.3V power	
82	DGND	Digital GND	
83	MPSEL0	Parallel/serial bus type selection '0': 4-line serial bus, '1': /Multiplex parallel	
84	XIN	Oscillation buffer input	
85	XOUT	Oscillation buffer output	
86	MPSEL1	MPSEL0='0' setting: '0': 4-line serial bus	
87	MDQ0/C656OUT0	MPSEL0='1' setting: Data input/output (address input) '0' setting: Microprocessor expander/ITU-R656 output	
88	QE/PXCLK0	Panel data enable signal output/ITU-R656 clock output	
89	QH	Panel horizontal sync signal output	
90	QV	Panel vertical sync signal output	
91	QDRVHA/QOE	Panel driver signal output A (variable horizontal period)/Panel data enable signal output	
92	DVDD33	Digital 3.3V power	
93	DGND	Digital GND	
94	DVDD18	Digital 1.8V power	
95	QDRVHB	Panel driver signal output B (variable horizontal period)	
96	QDRVHC	Panel driver signal output C (variable horizontal period)	

Downloaded from www.Manualslib.com manuals search engine

Pin No.	Pin name	Function	Pin status
97	QDRVHD	Panel driver signal output D (variable horizontal period)	
98	QDRVHE	Panel driver signal output E (variable horizontal period)	
99	DVDD33	Digital 3.3V power	
100	DGND	Digital GND	
101	DVDDSD	Digital 3.3V power	
102	QDRVHF	Panel driver signal output F (variable horizontal period)	
103	QDRVVA	Panel driver signal output A (variable vertical period)	
104	QDRVVB	Panel driver signal output B (variable vertical period)	
105	QCLKL	Panel clock signal output (L)	
106	QGL0	Panel G signal (L) output	
107	DVDD18	Digital 1.8V power	
108	DGND	Digital GND	
109	DVDD33	Digital 3.3V power	
110	TEST0	Test signal input 1	Connected to GND
111	LPF1	PLL1 (panel clock) LPF terminal	
112	TEST1	Test signal input 2	Connected to GND
113	QGL1	Panel G signal (L) output	
114	QGL2	Panel G signal (L) output	
115	QGL3	Panel G signal (L) output	
116	QGL4	Panel G signal (L) output	
117	DVDD33	Digital 3.3V power	
118	DGND	Digital GND	
119	QGL5	Panel G signal (L) output	
120	QGL6	Panel G signal (L) output	
121	QGL7	Panel G signal (L) output	
122	QBL0	Panel B signal (L) output	
123	QBL1	Panel B signal (L) output	
124	DVDD18	Digital 1.8V power	
125	DGND	Digital GND	
126	DVDD33	Digital 3.3V power	
127	QBL2	Panel B signal (L) output	
128	QBL3	Panel B signal (L) output	
129	QBL4	Panel B signal (L) output	
130	QBL5	Panel B signal (L) output	
131	QBL6	Panel B signal (L) output	
132	QBL7	Panel B signal (L) output	
133	QRL0	Panel R signal (L) output	
134	QRL1	Panel R signal (L) output	
135	QRL2	Panel R signal (L) output	
136	DVDD18	Digital 1.8V power	
137	DGND	Digital GND	
138	DVDD33	Digital 3.3V power	
139	QRL3	Panel R signal (L) output	
140	QRL4	Panel R signal (L) output	
141	QRL5	Panel R signal (L) output	
142	QRL6	Panel R signal (L) output	
143	QRL7	Panel R signal (L) output	
144	QCLKR	Panel clock signal output (R)	
145	QGR0	Panel G signal (R) output	
146	QGR1	Panel G signal (R) output	
147	DVDD18	Digital 1.8V power	
148	DGND	Digital GND	
149	DVDD33	Digital 3.3V power	
150	QGR2	Panel G signal (R) output	
151	QGR3	Panel G signal (R) output	
152	QGR4	Panel G signal (R) output	
153	QGR5	Panel G signal (R) output	
154	QGR6	Panel G signal (R) output	
155	QGR7	Panel G signal (R) output	
156	DVDD33	Digital 3.3V power	

Downloaded from www.Manualslib.com manuals search engine

Pin No.	Pin name	Function	Pin status
157	DGND	Digital GND	
158	QBR0	Panel B signal (R) output	
159	QBR1	Panel B signal (R) output	
160	QBR2	Panel B signal (R) output	
161	QBR3	Panel B signal (R) output	
162	DVDD33	Digital 3.3V power	
163	DGND	Digital GND	
164	DVDD18	Digital 1.8V power	
165	QBR4	Panel B signal (R) output	
166	QBR5	Panel B signal (R) output	
167	QBR6	Panel B signal (R) output	
168	QBR7	Panel B signal (R) output	
169	QRR0	Panel R signal (R) output	
170	DVDDSD	Digital 3.3V power	
171	DGND	Digital GND	
172	DVDD33	Digital 3.3V power	
173	QRR1	Panel R signal (R) output	
174	QRR2	Panel R signal (R) output	
175	QRR3	Panel R signal (R) output	
176	DVDD18	Digital 1.8V power	
177	DGND	Digital GND	
178	DVDD33	Digital 3.3V power	
179	QRR4	Panel R signal (R) output	
180	QRR5	Panel R signal (R) output	
181	QRR6	Panel R signal (R) output	
182	QRR7	Panel R signal (R) output	
183	TSTCLK	Test clock signal input	Pull-down when not used
184	QBLCA	Backlight signal A	
185	QBLCB	Backlight signal B	
186	QBLCC	Backlight signal C	
187	QBLCD	Backlight signal D	
188	DGND	Digital GND	
189	DVDDSD	Digital 3.3V power	
190	PXCLK	Pixel clock signal input	Pull-up when not used
191	PXD00	Pixel data signal (A) input/output	Pull-up when not used
192	PXD01	Pixel data signal (A) input/output	Pull-up when not used
193	PXD02	Pixel data signal (A) input/output	Pull-up when not used
194	PXD03	Pixel data signal (A) input/output	Pull-up when not used
195	PXD04	Pixel data signal (A) input/output	Pull-up when not used
196	PXD05	Pixel data signal (A) input/output	Pull-up when not used
197	DVDD18	Digital 1.8V power	
198	DGND	Digital GND	
199	DVDD33	Digital 3.3V power	
200	PXD06	Pixel data signal (A) input/output	Pull-up when not used
201	PXD07	Pixel data signal (A) input/output	Pull-up when not used
202	PXD10	Pixel data signal (B) input/output	Pull-up when not used
203	PXD11	Pixel data signal (B) input/output	Pull-up when not used
204	PXD12	Pixel data signal (B) input/output	Pull-up when not used
205	PXD13	Pixel data signal (B) input/output	Pull-up when not used
206	PXD14	Pixel data signal (B) input/output	Pull-up when not used
207	DVDDSD	Digital 3.3V power	
208	PXD15	Pixel data signal (B) input/output	Pull-up when not used
209	PXD16	Pixel data signal (B) input/output	Pull-up when not used
210	PXD17	Pixel data signal (B) input/output	Pull-up when not used
211	PXD20	Pixel data signal (C) input/output	Pull-up when not used
212	PXD21	Pixel data signal (C) input/output	Pull-up when not used
213	PXD22	Pixel data signal (C) input/output	Pull-up when not used
214	PXD23	Pixel data signal (C) input/output	Pull-up when not used
215	DVDD18	Digital 1.8V power	
216	DGND	Digital GND	

Downloaded from www.Manualslib.com manuals search engine

BLOCK DIAGRAM

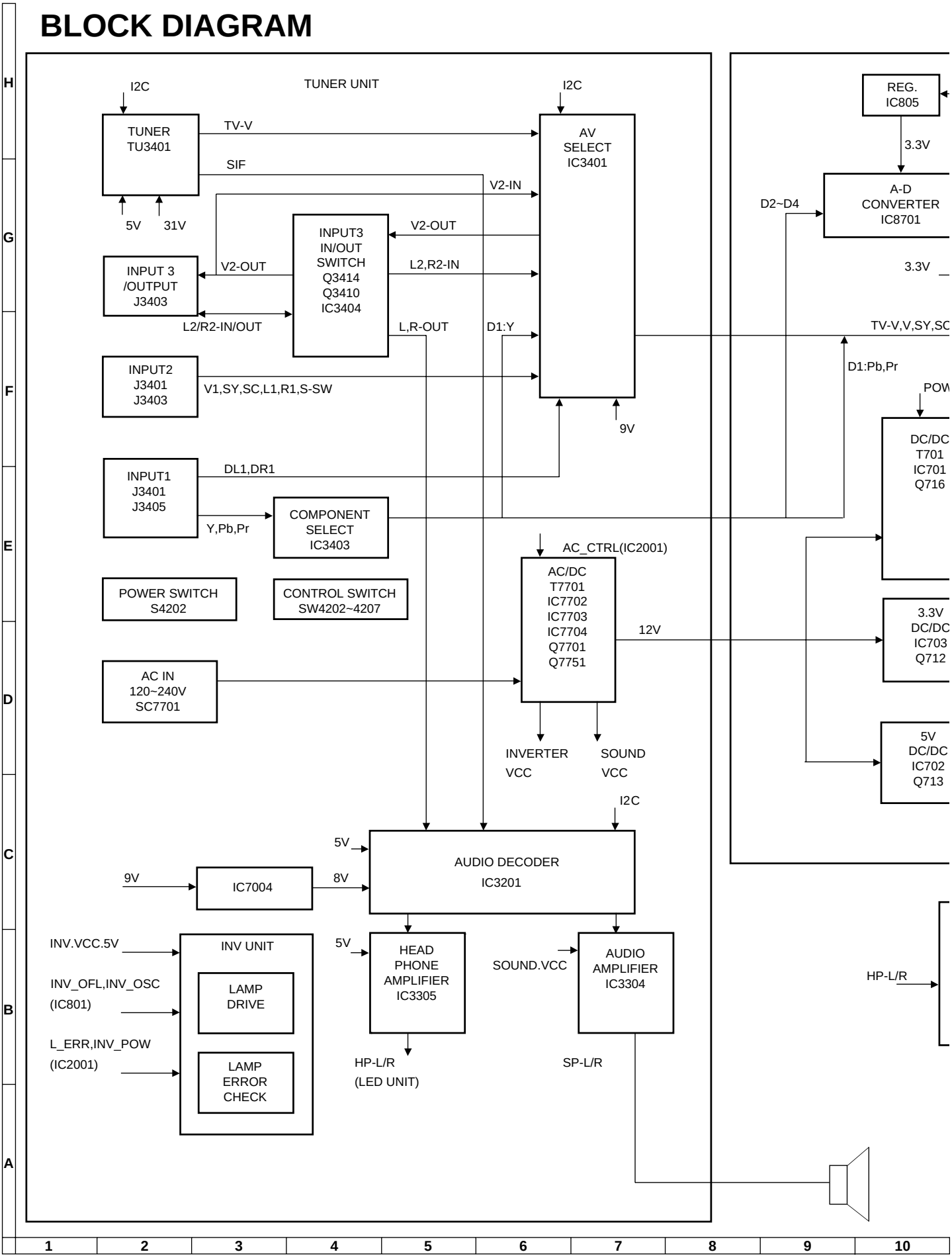

Downloaded from www.Manualslib.com manuals search engine

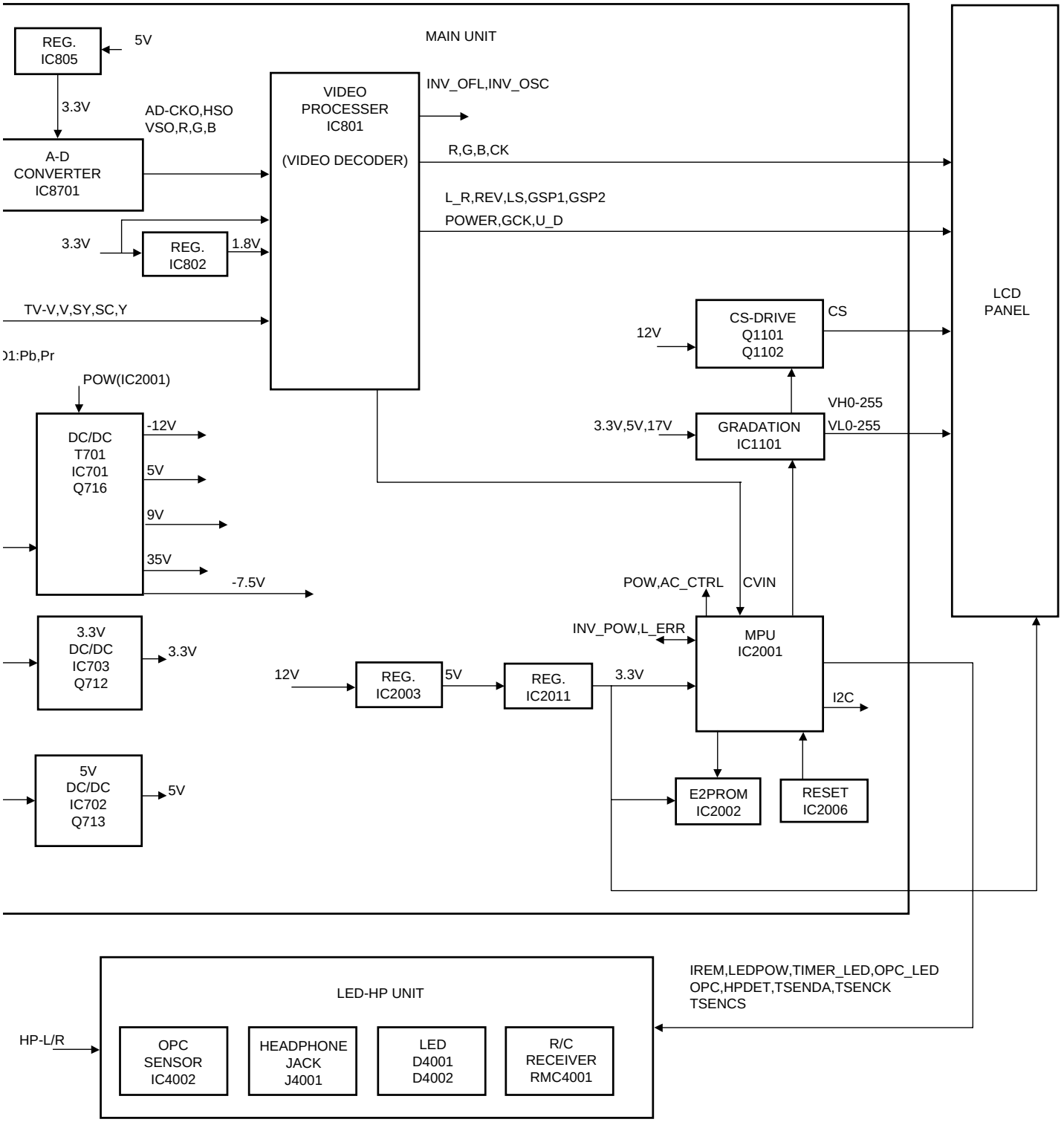

10	11	12	13	14	15	16	17	18	19

Downloaded from www.Manualslib.com manuals search engine

OVERALL WIRING DIAGRAM

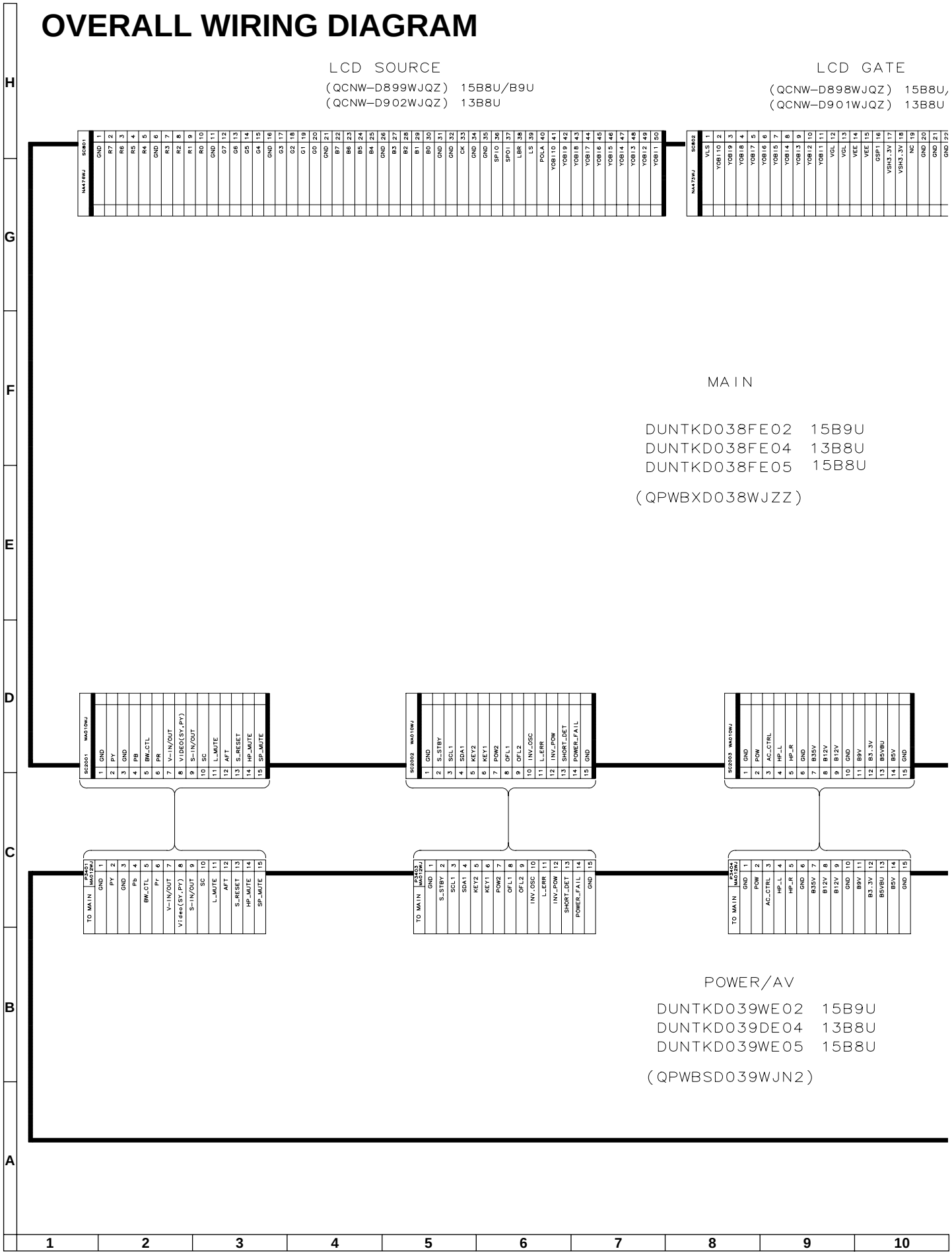

Downloaded from www.Manualslib.com manuals search engine

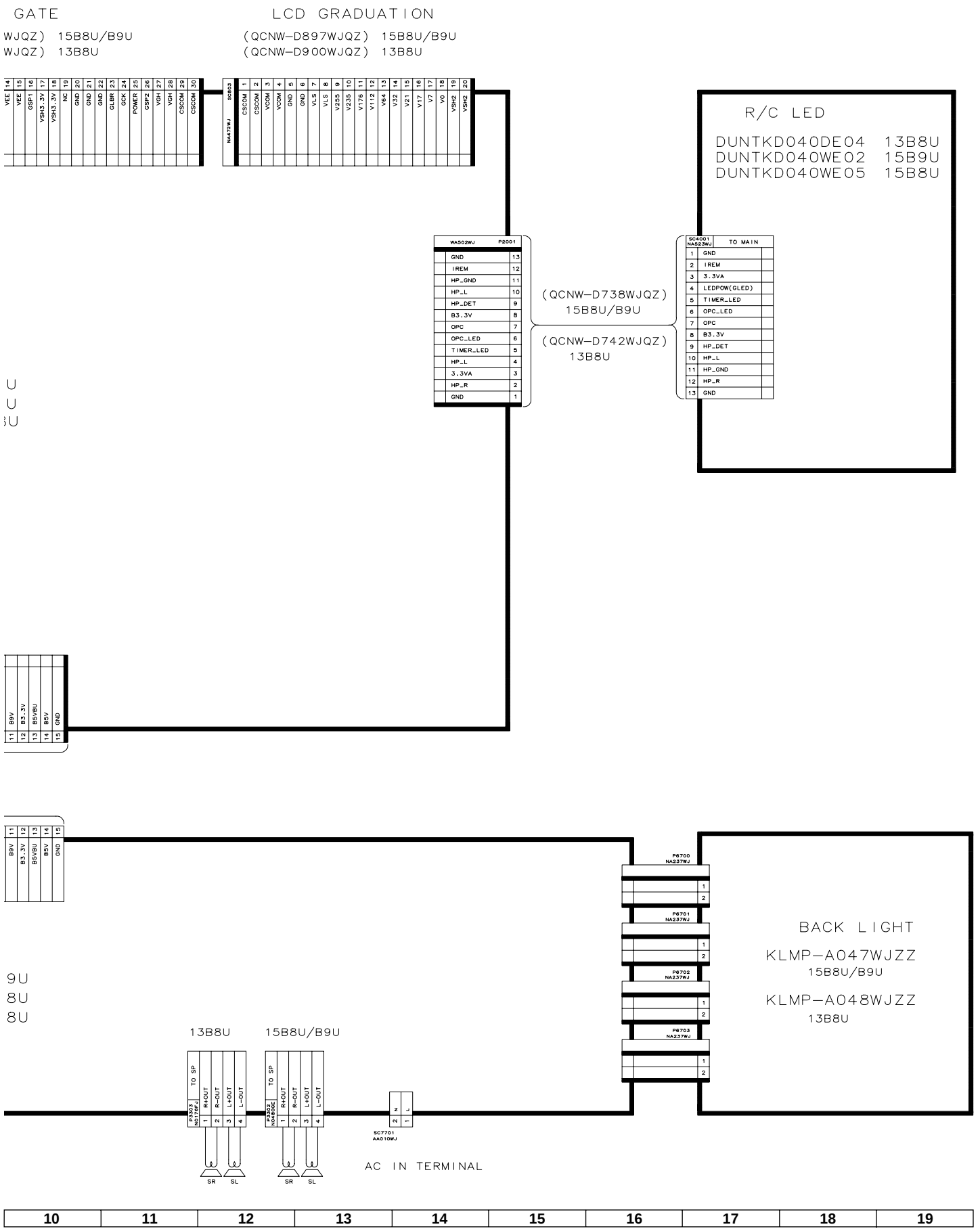

Downloaded from www.Manualslib.com manuals search engine

DESCRIPTION OF SCHEMATIC DIAGRAM

VOLTAGE MEASUREMENT CONDITION:

1. The voltages at test points are measured on the stable supply voltage of AC 120V. Signals are fed by a color bar signal generator for servicing purpose and the above voltages are measured with a 20k ohm/V tester.

INDICATION OF RESISTOR & CAPACITOR:

RESISTOR

1. The unit of resistance "Ω" is omitted. (K=kΩ=1000 Ω, M=MΩ).
2. All resistors are ± 5%, unless otherwise noted. (K= ± 10%, F= ± 1%, D= ± 0.5%)
3. All resistors are 1/16W, unless otherwise noted.

CAPACITOR

1. All capacitors are μF, unless otherwise noted. (P=pF=μμF).
2. All capacitors are 50V, unless otherwise noted.

CAUTION:
This circuit diagram is original one, therefore there may be a slight difference from yours.

SAFETY NOTES:

1.DISCONNECT THE AC PLUG FROM THE AC OUTLET BEFORE REPLACING PARTS.
2.SEMICONDUCTOR HEAT SINKS SHOULD BE REGARDED AS POTENTIAL SHOCK HAZARDS WHEN THE CHASSIS IS OPERATING.

IMPORTANT SAFETY NOTICE:

PARTS MARKED WITH "⚠" ( ) ARE IMPORTANT FOR MAINTAINING THE SAFETY OF THE SET. BE SURE TO REPLACE THESE PARTS WITH SPECIFIED ONES FOR MAINTAINING THE SAFETY AND PERFORMANCE OF THE SET.

AVIS DE SECURITE IMPORTANT:

LES PIECES MARQUEES "⚠" ( )SONT IMPORTANTES POUR MAINTENIR LA SECURITE DE L'APPAREIL.
NE REMPLACER CES PIEDES QUE PAR DES PIECES DONT LE NUMERO EST SPECIFIE POUR MAINTENIR LA SECURITE ET PROTEGER LE BON FONCTIONNEMENT DE L'APPAREIL.

Downloaded from www.Manualslib.com manuals search engine

SCHEMATIC DIAGRAM

■ R/C, LED Unit

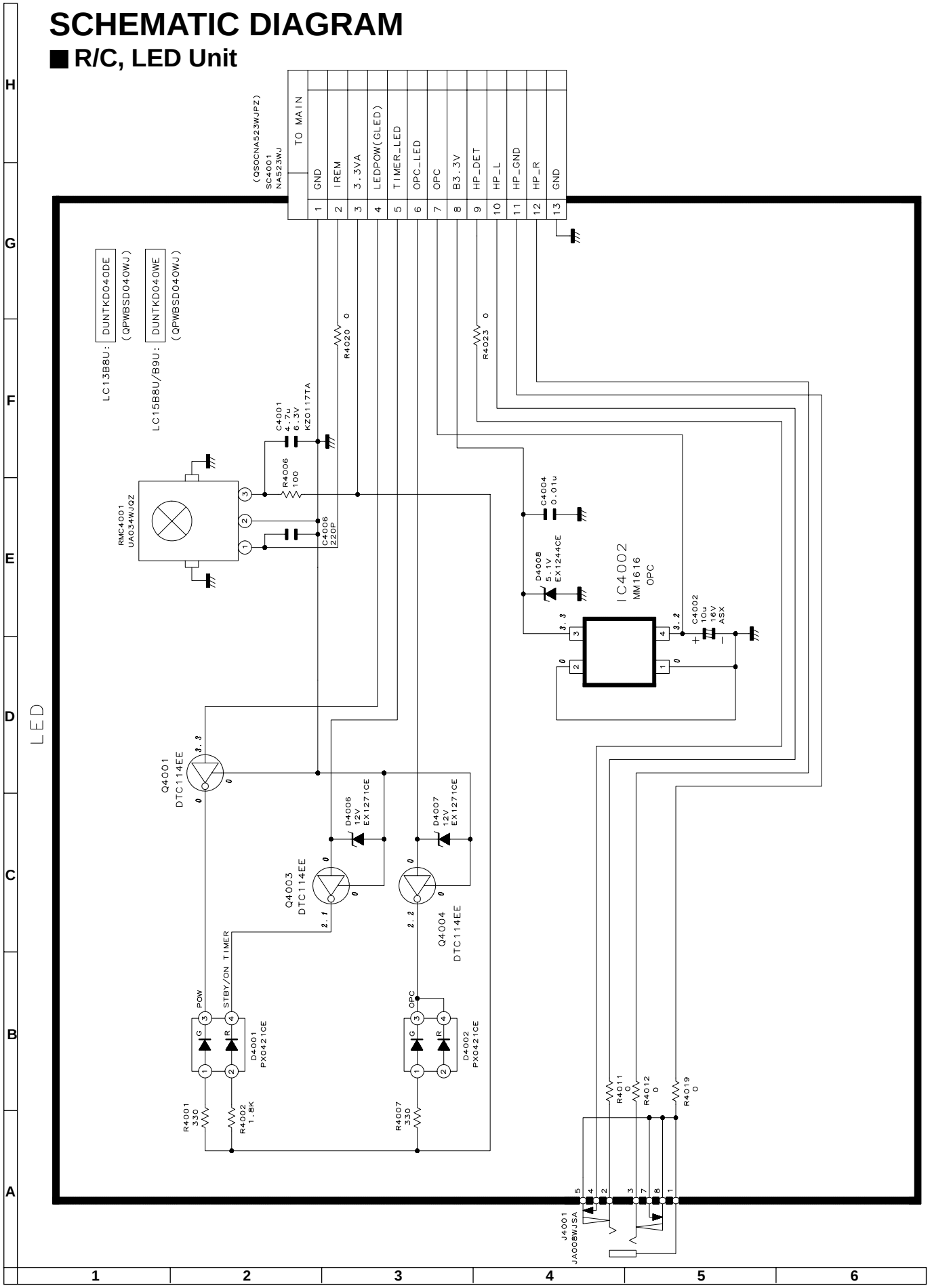

Downloaded from www.Manualslib.com manuals search engine

■MAIN Unit-1/6 (LC-13B8U-S)

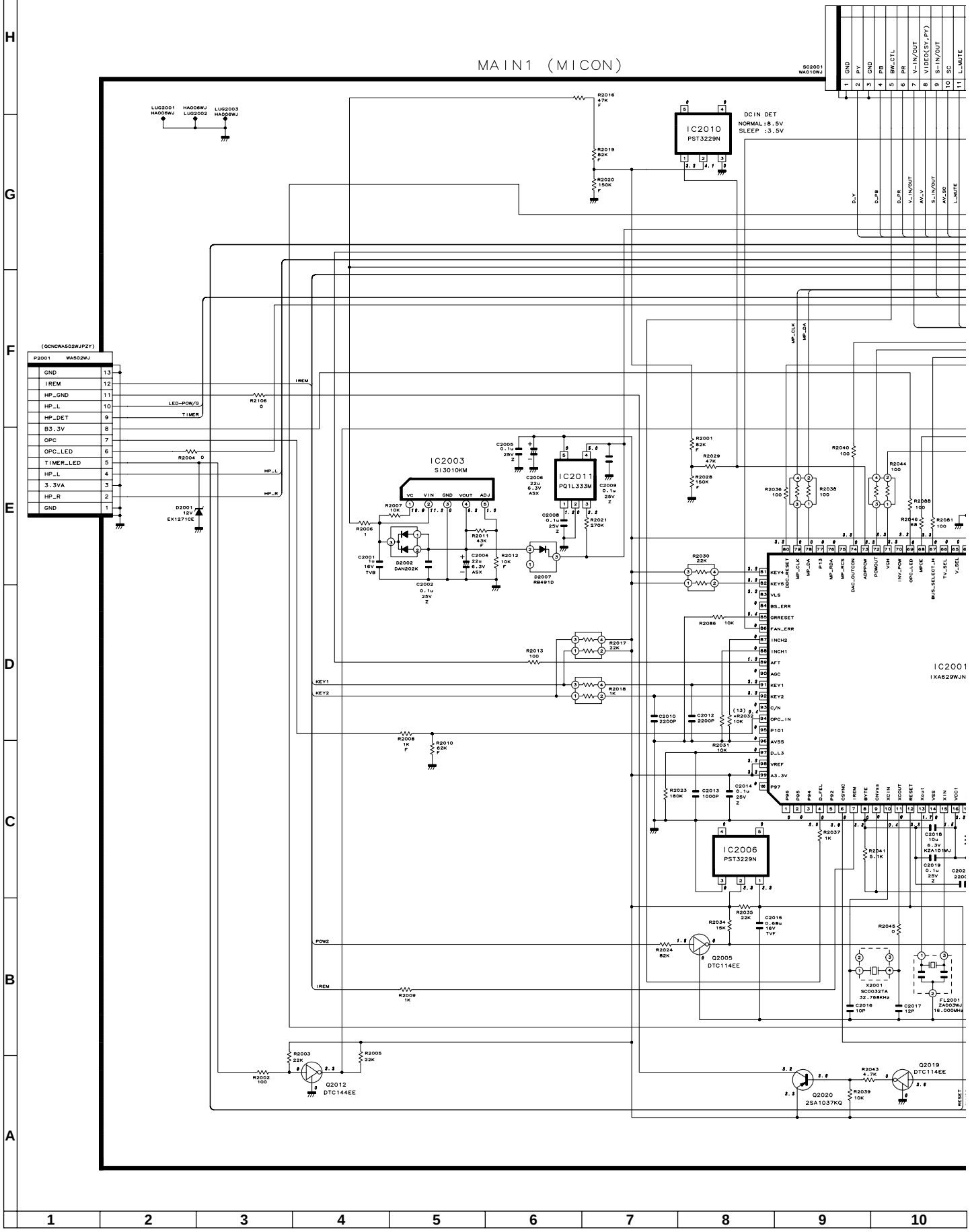

Downloaded from www.Manualslib.com manuals search engine

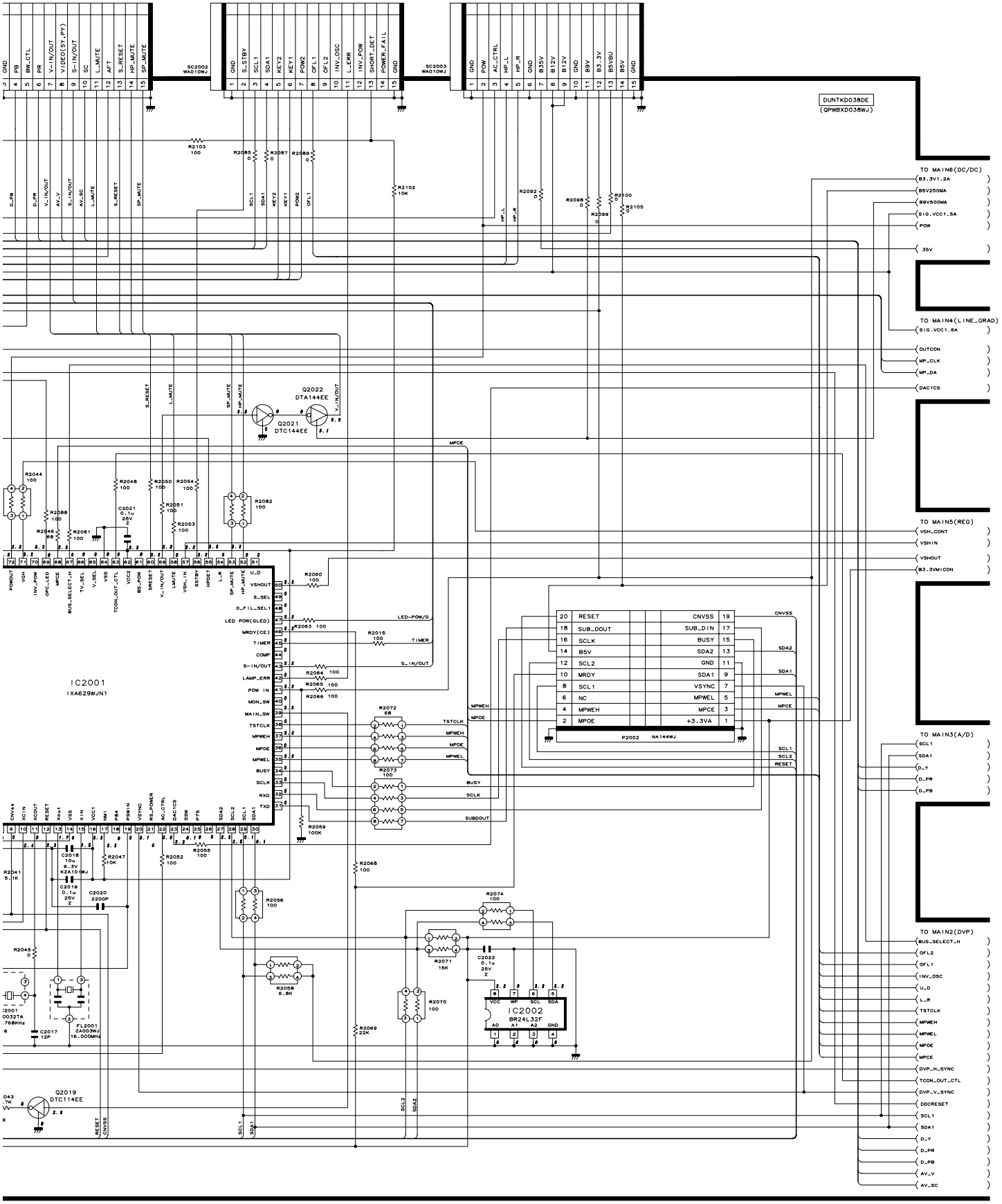

10	11	12	13	14	15	16	17	18	19

Downloaded from www.Manualslib.com manuals search engine

■MAIN Unit-1/6 (LC-15B8U-S, LC-15B9U-SM)

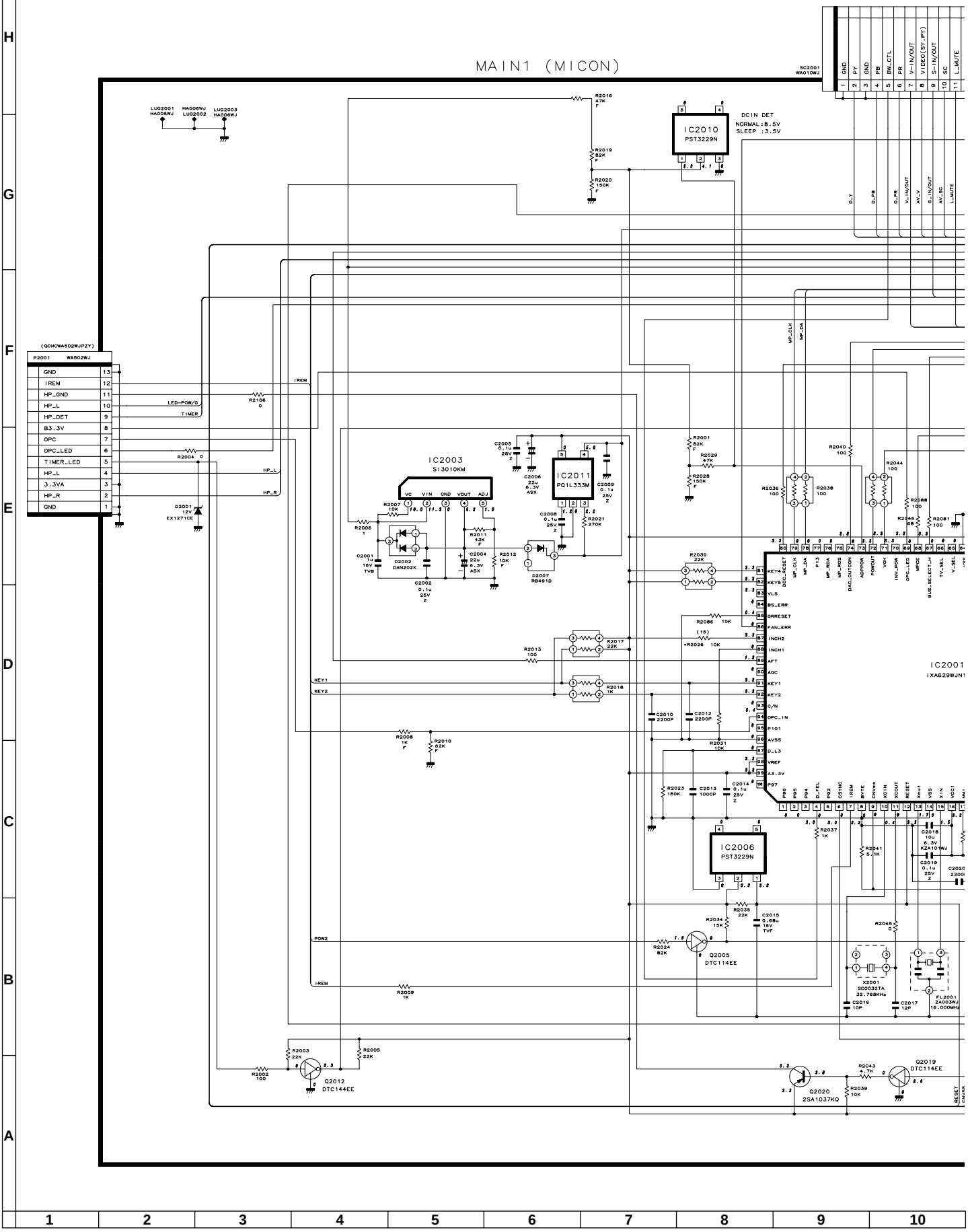

Downloaded from www.Manualslib.com manuals search engine

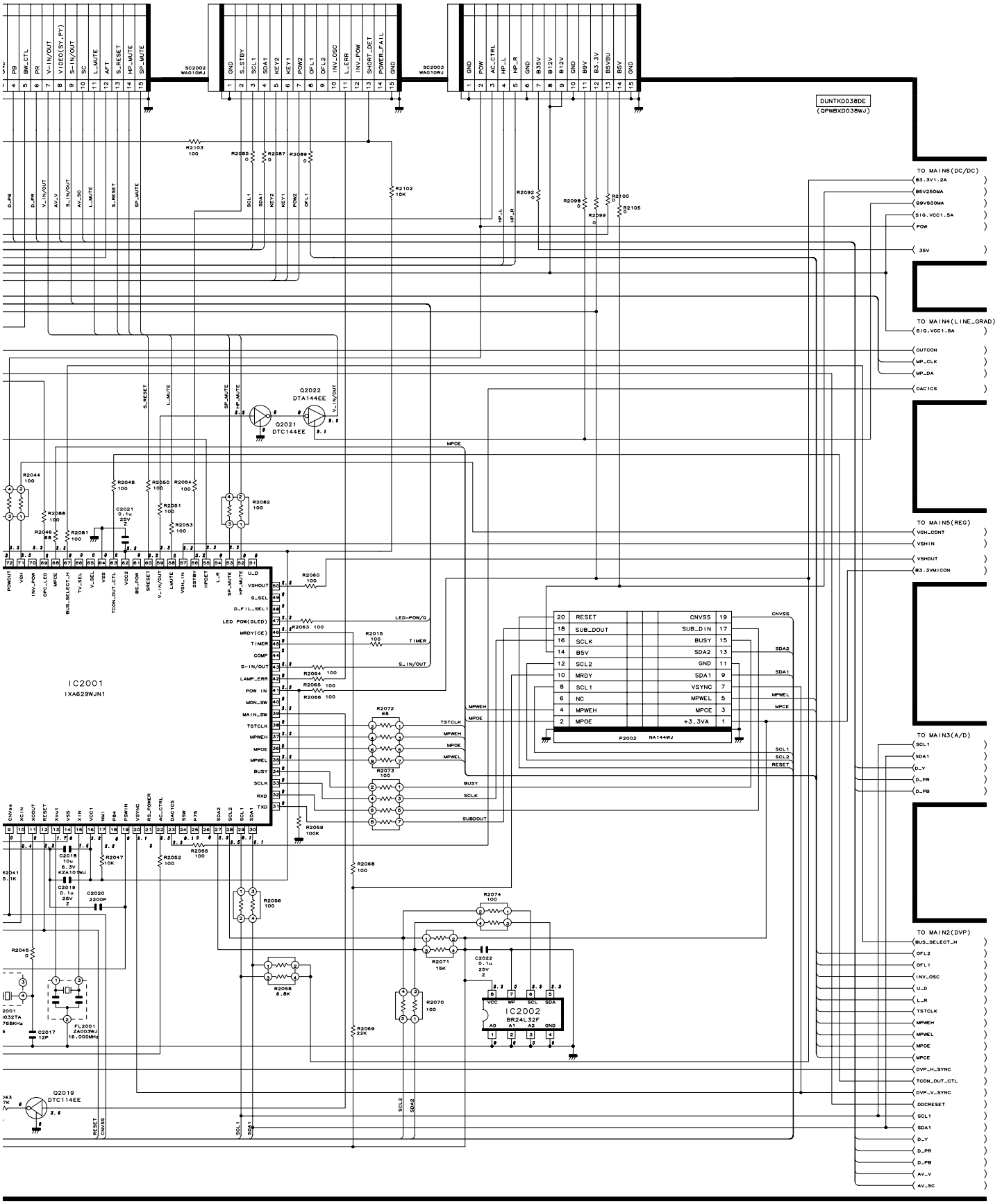

10	11	12	13	14	15	16	17	18	19

Downloaded from www.Manualslib.com manuals search engine

■MAIN Unit-2/6

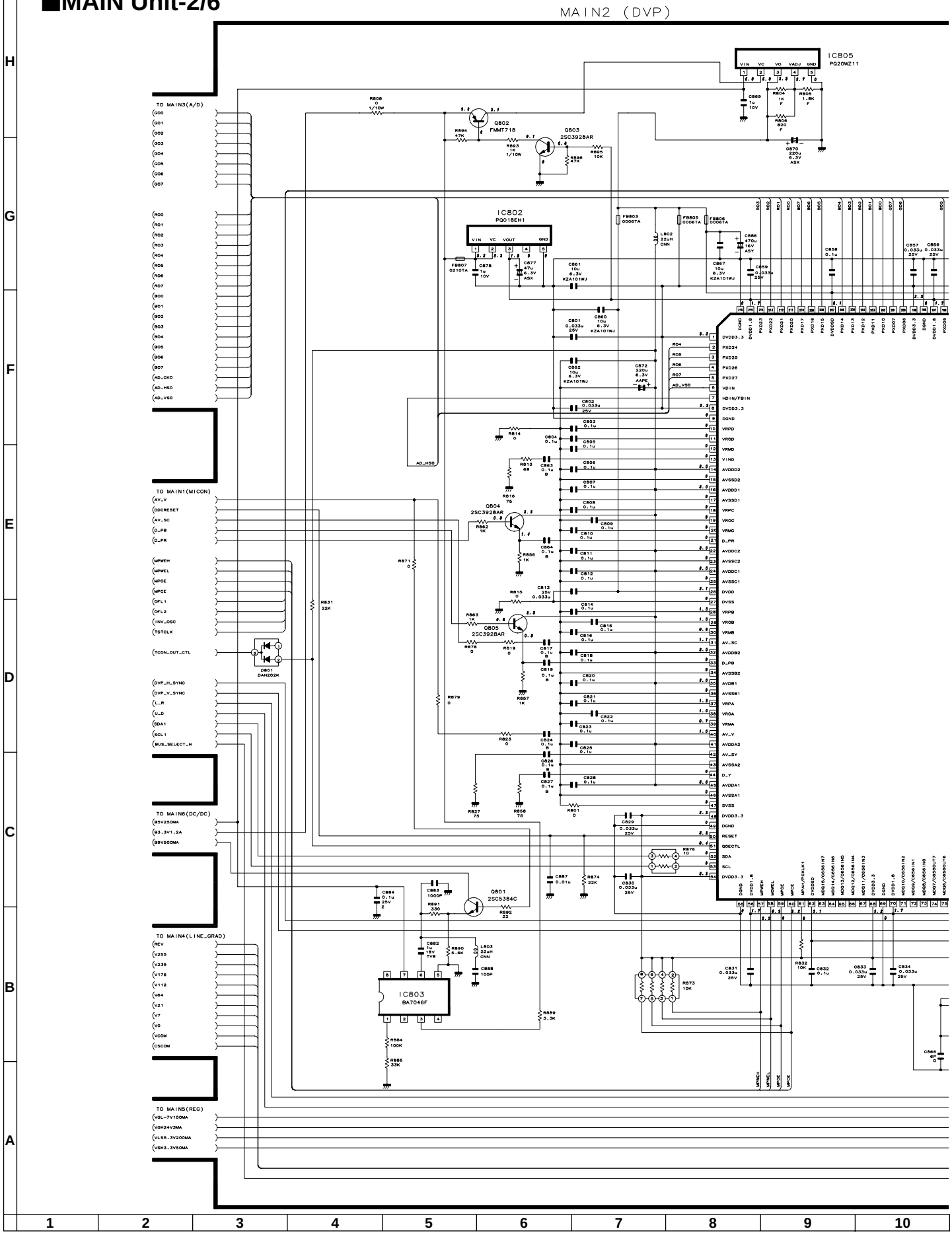

Downloaded from www.Manualslib.com manuals search engine

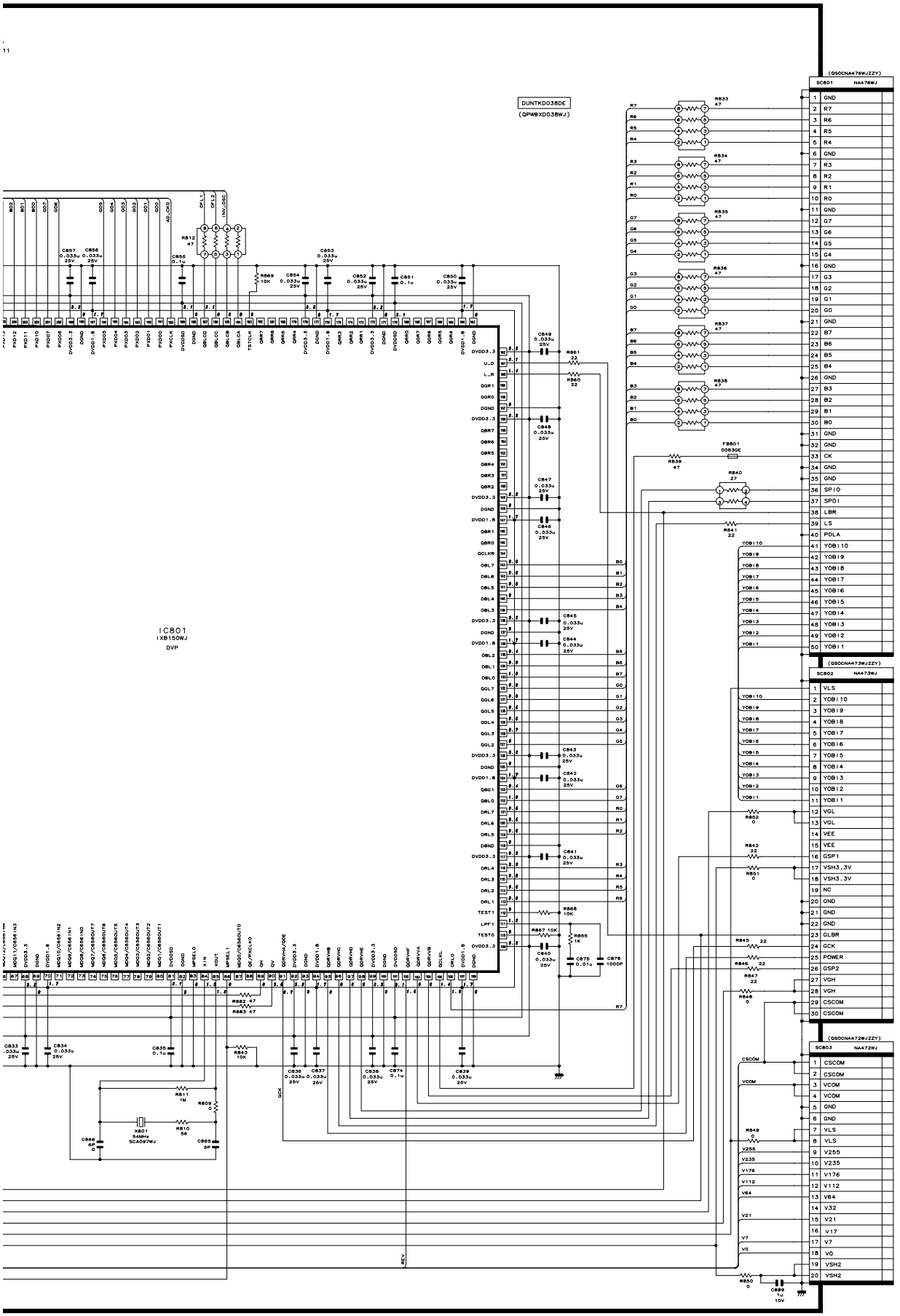

10	11	12	13	14	15	16	17	18	19

Downloaded from www.Manualslib.com manuals search engine

■MAIN Unit-3/6

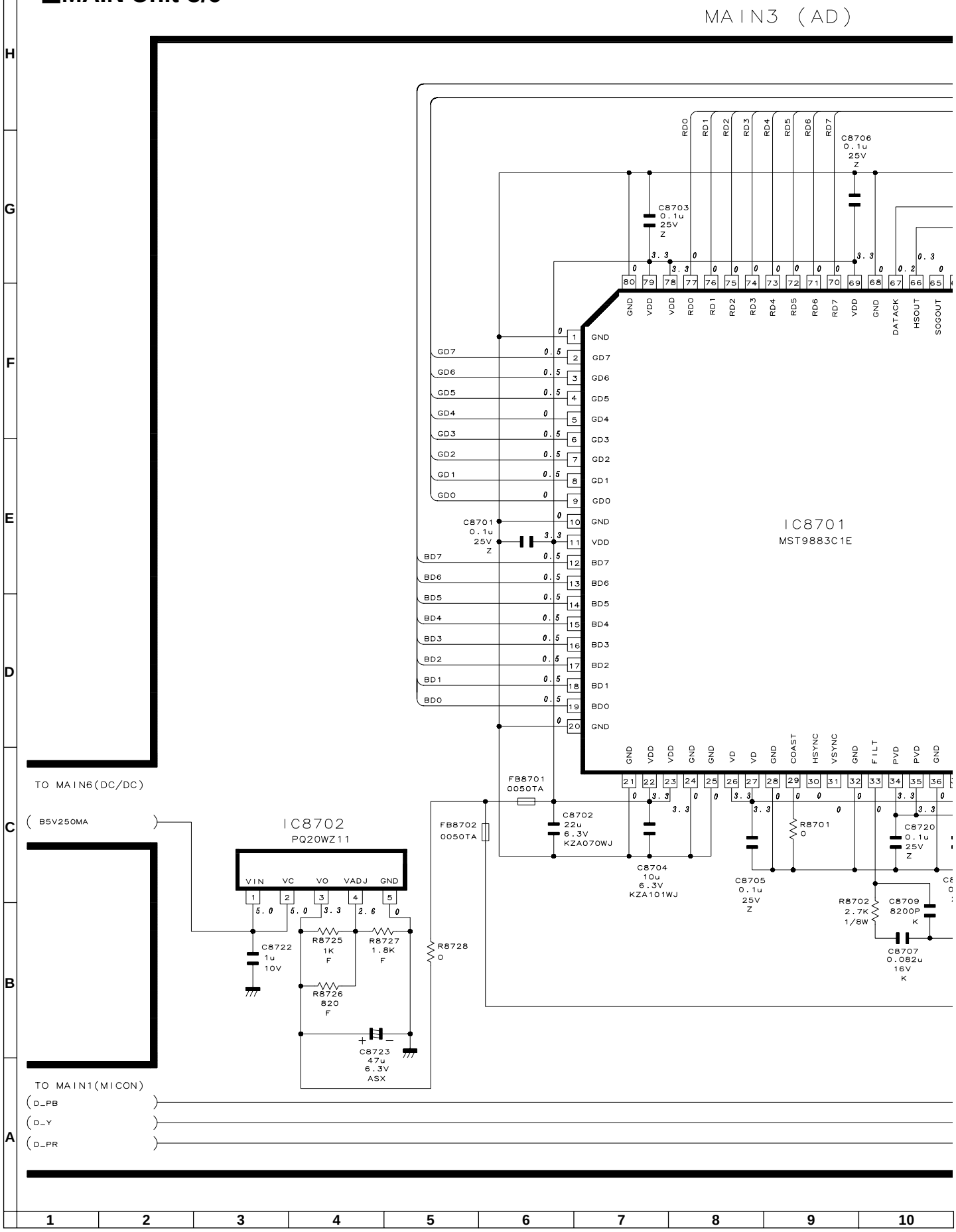

Downloaded from www.Manualslib.com manuals search engine

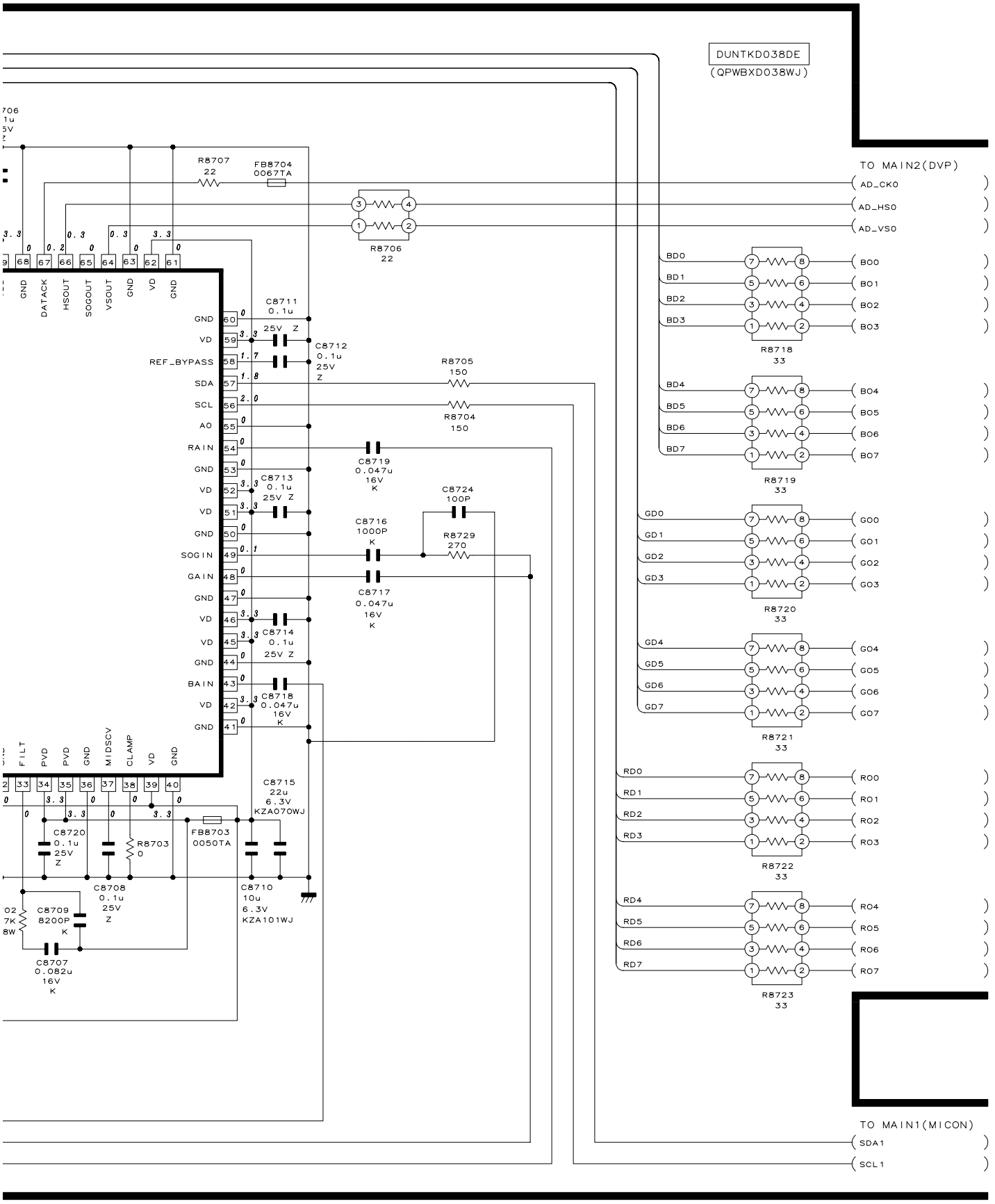

10	11	12	13	14	15	16	17	18	19

Downloaded from www.Manualslib.com manuals search engine

■MAIN Unit-4/6

MAIN4 (LINE_GRAD)

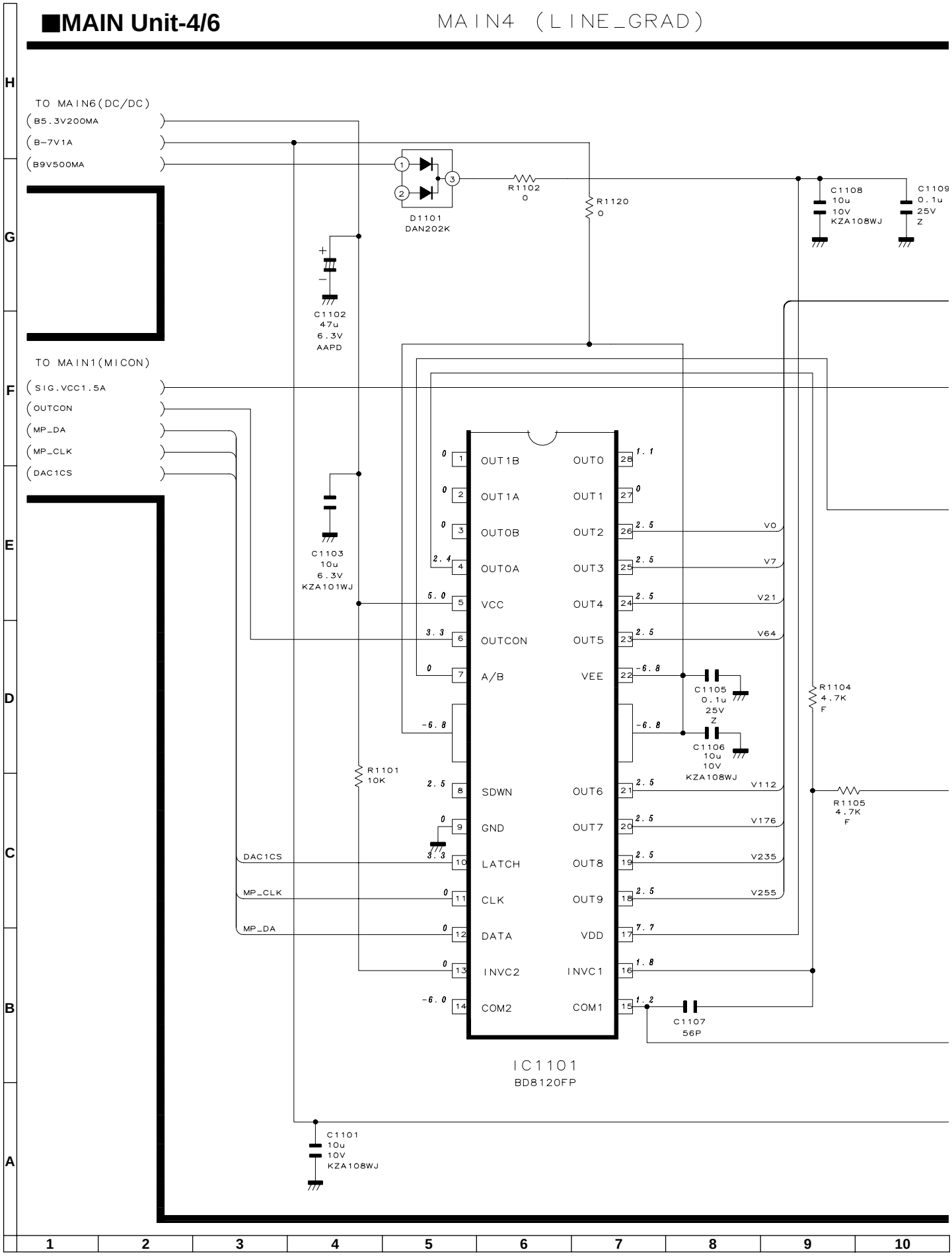

Downloaded from www.Manualslib.com manuals search engine

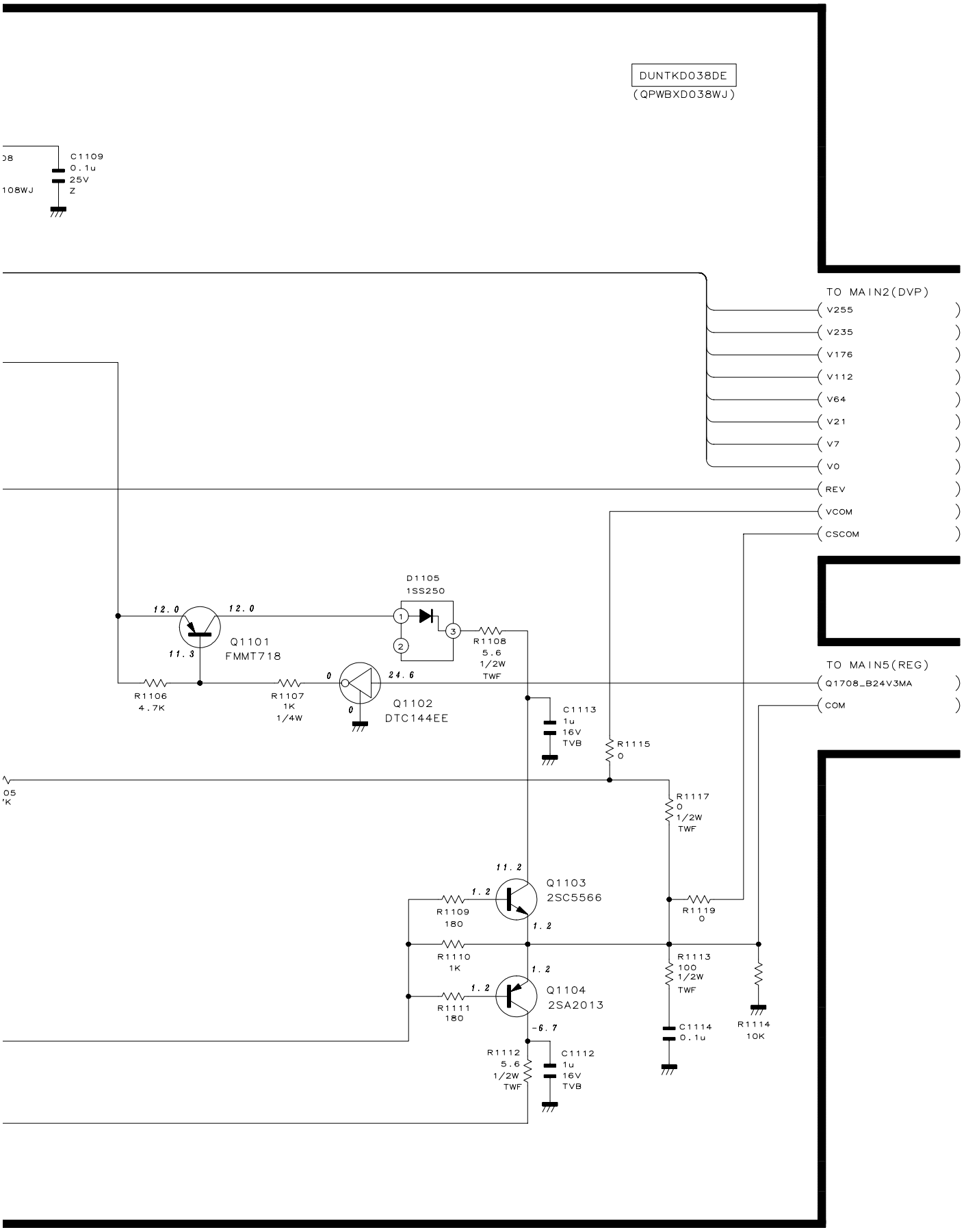

10	11	12	13	14	15	16	17	18	19

Downloaded from www.Manualslib.com manuals search engine

■MAIN Unit-5/6

MAIN5 (REG)

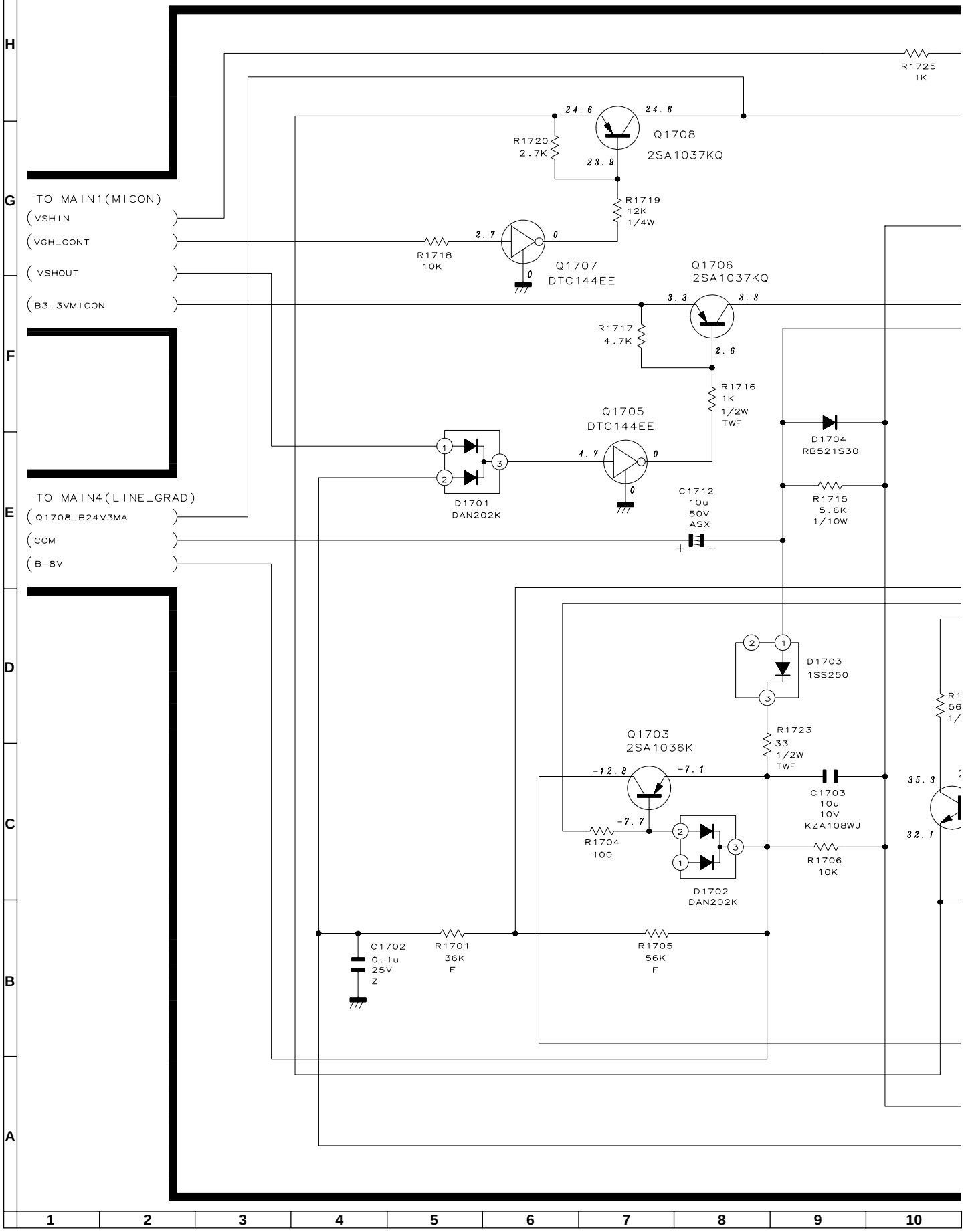

Downloaded from www.Manualslib.com manuals search engine

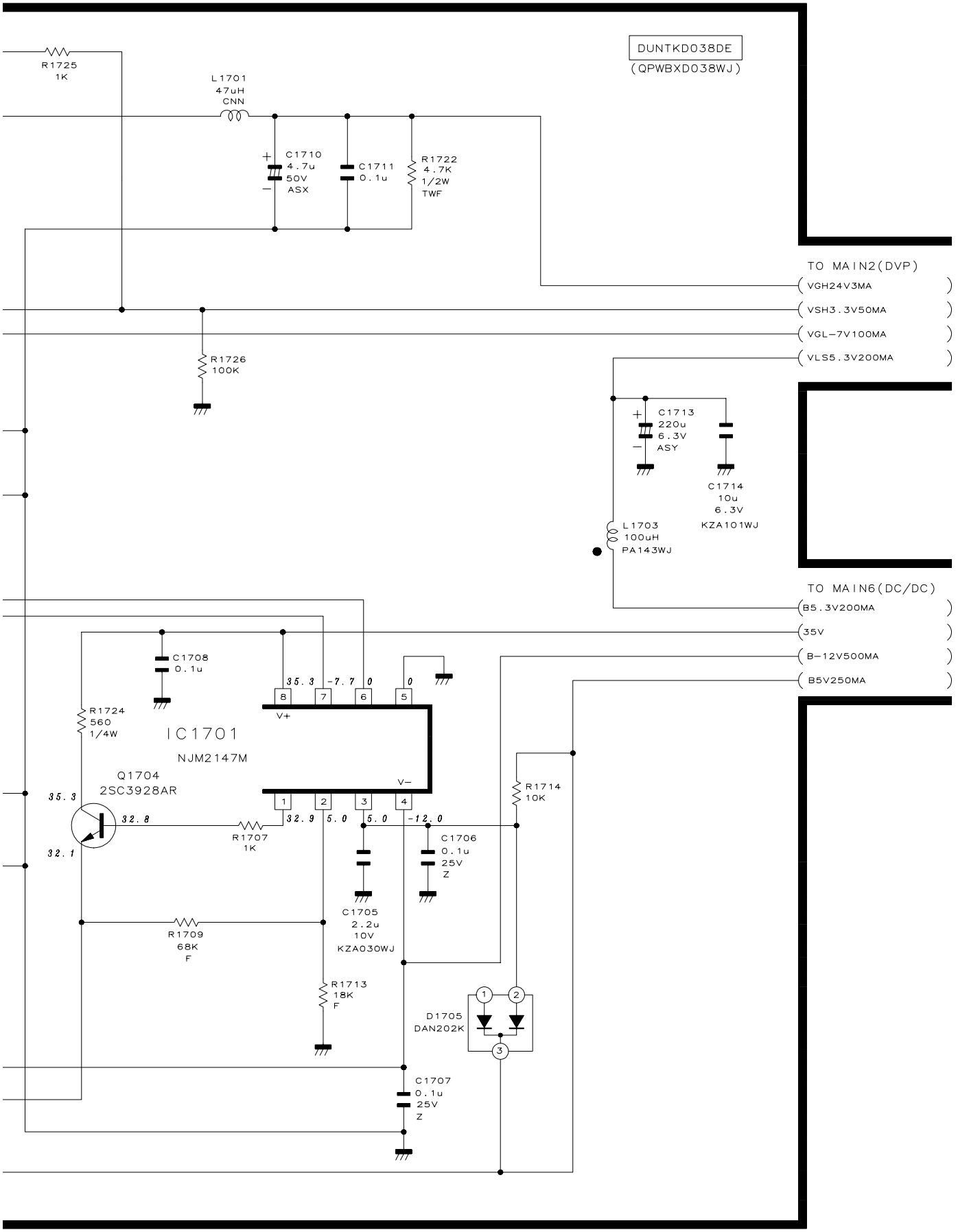

10	11	12	13	14	15	16	17	18	19

Downloaded from www.Manualslib.com manuals search engine

■MAIN Unit-6/6

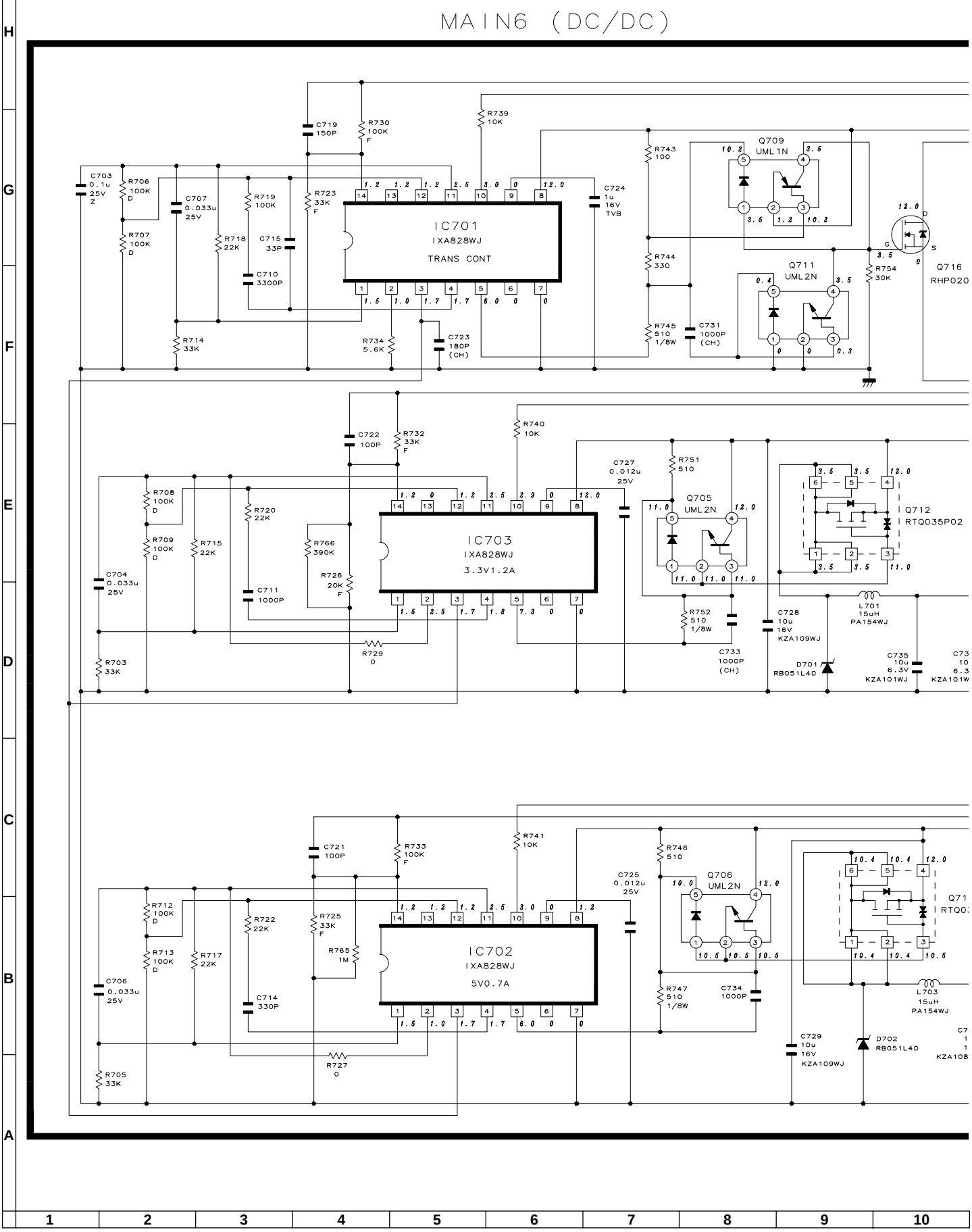

Downloaded from www.Manualslib.com manuals search engine

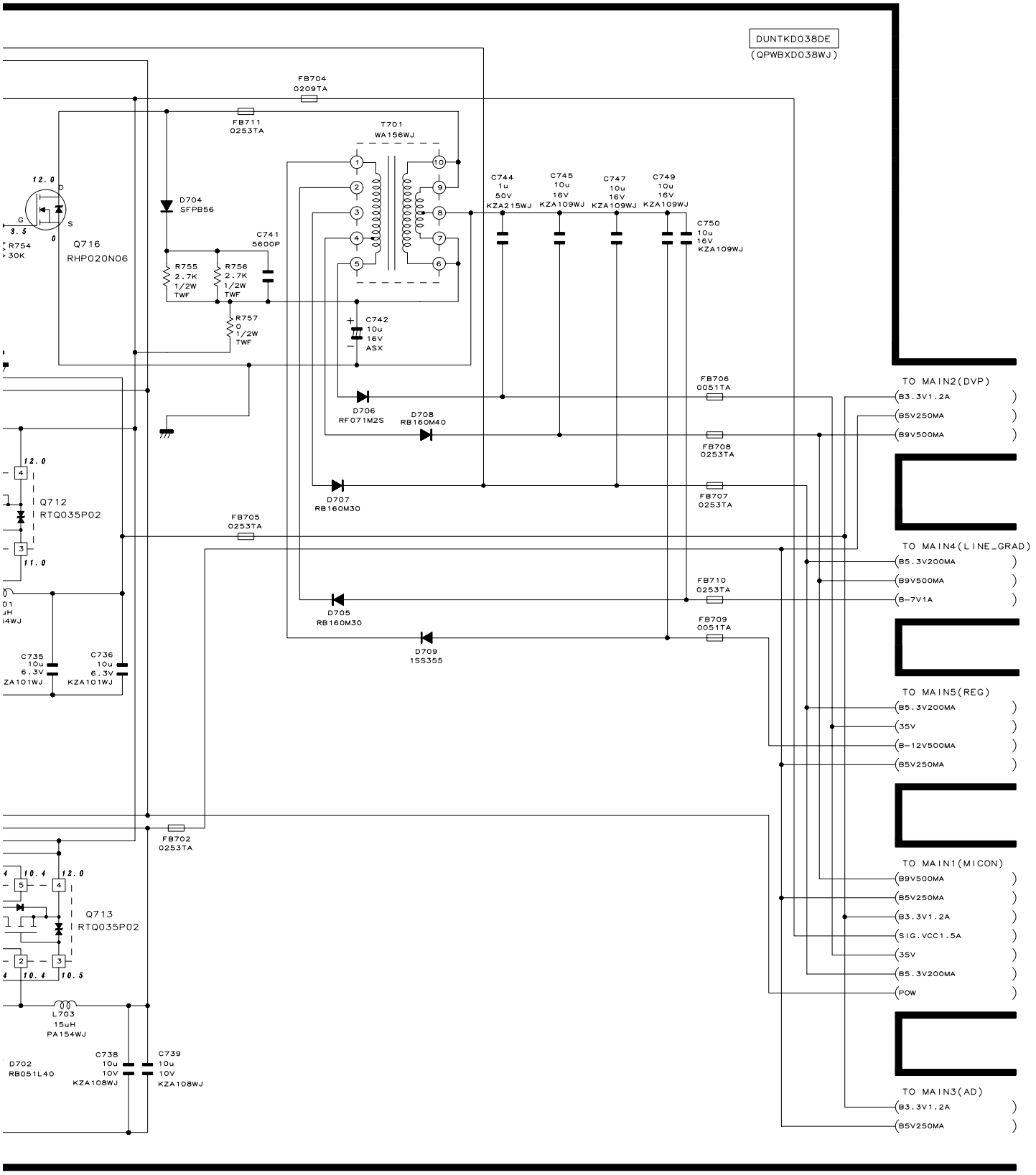

10	11	12	13	14	15	16	17	18	19

Downloaded from www.Manualslib.com manuals search engine

■SUB Unit-1/6

SUB1 (TUNER/INPUT)

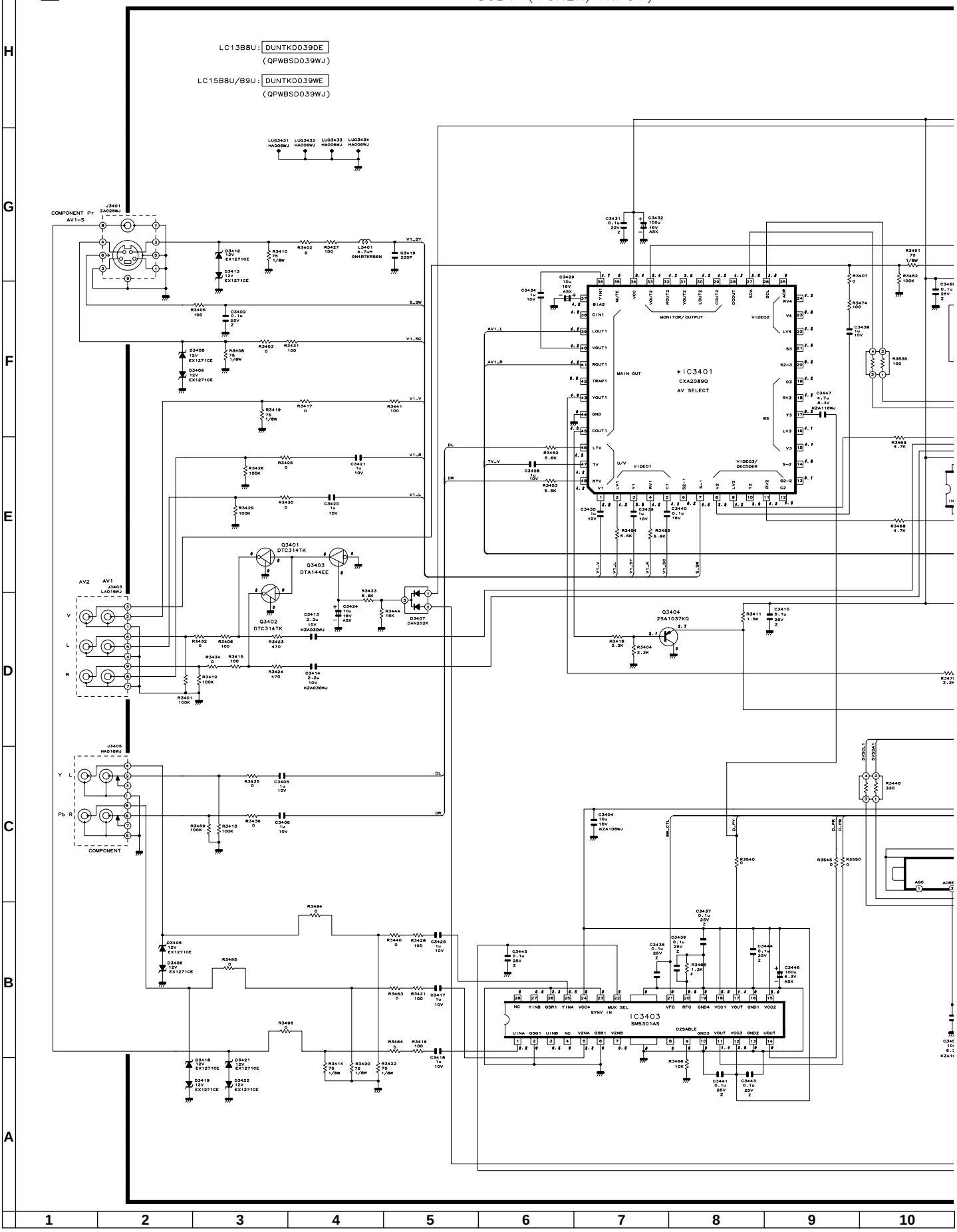

Downloaded from www.Manualslib.com manuals search engine

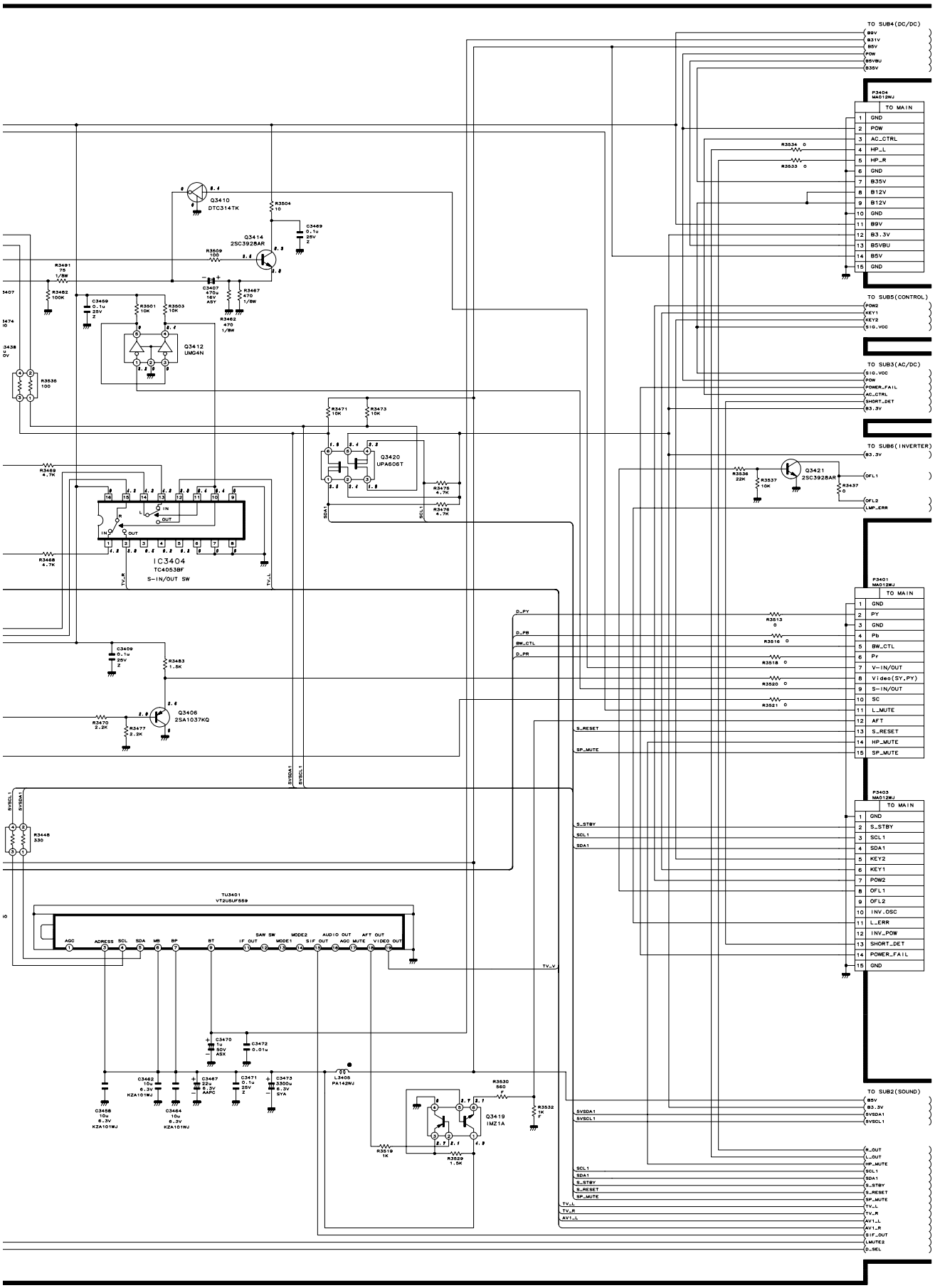

10	11	12	13	14	15	16	17	18	19

Downloaded from www.Manualslib.com manuals search engine

■SUB Unit-2/6 (LC-13B8U-S)

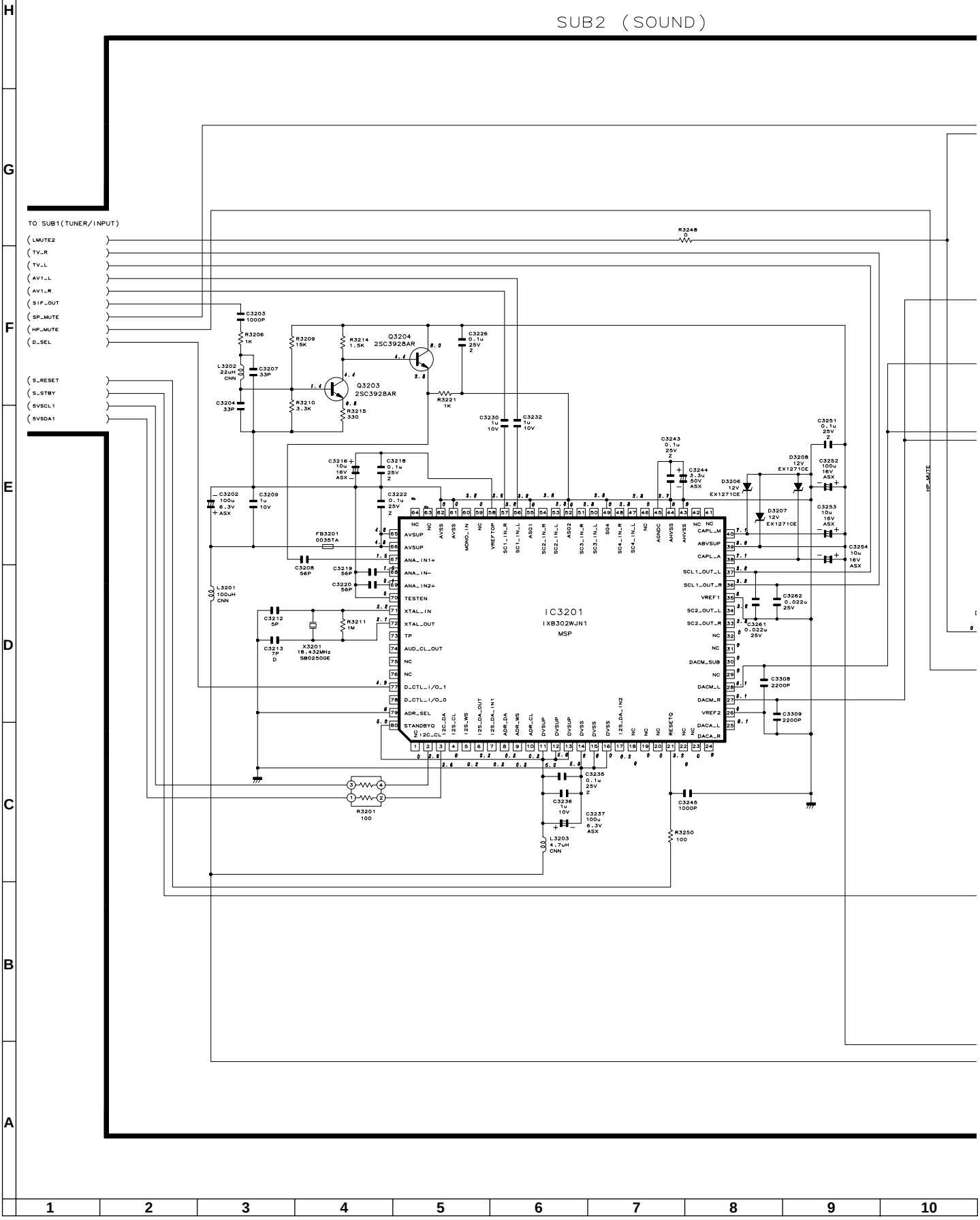

Downloaded from www.Manualslib.com manuals search engine

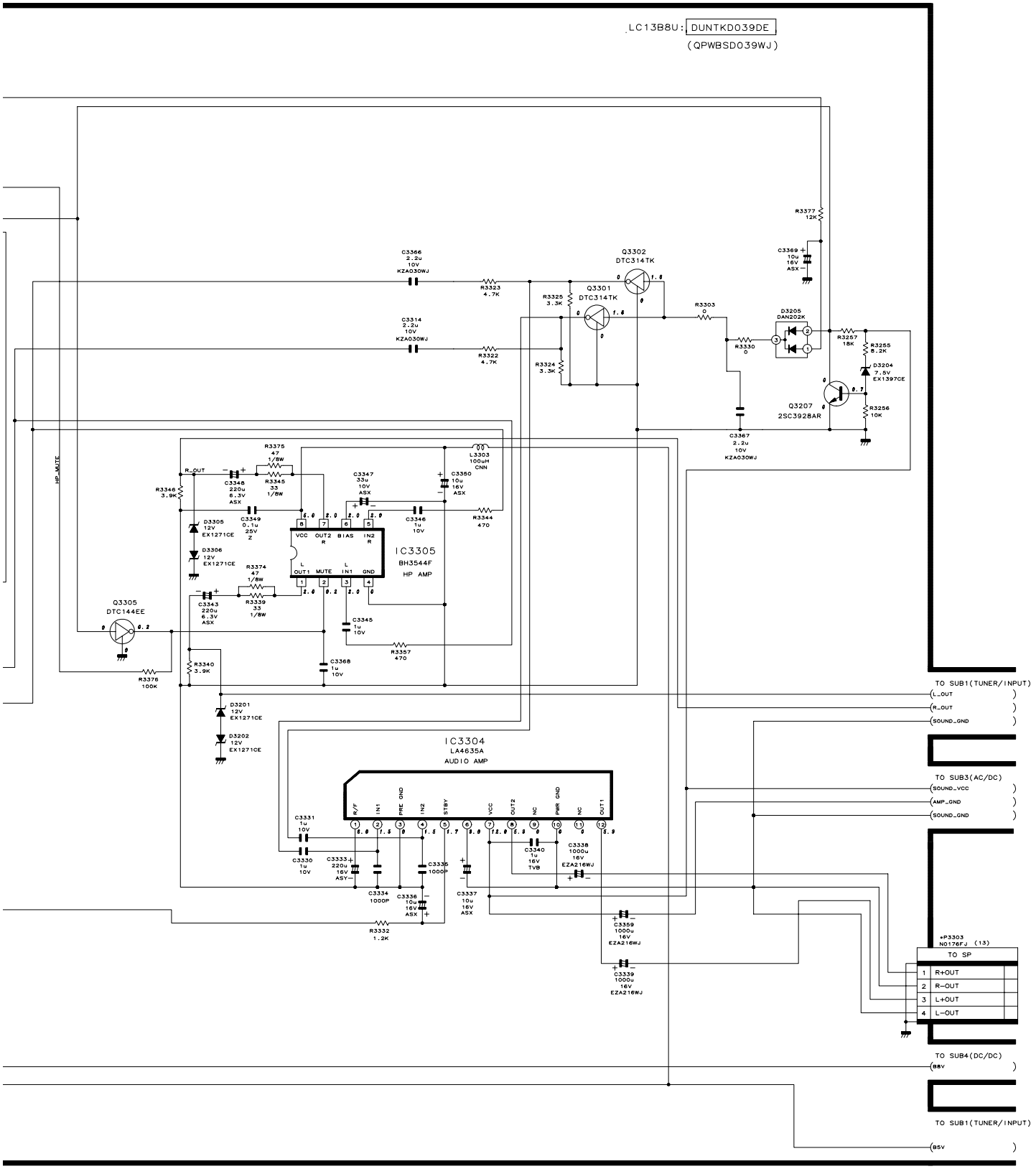

10	11	12	13	14	15	16	17	18	19

Downloaded from www.Manualslib.com manuals search engine

■SUB Unit-2/6 (LC-15B8U-S, LC-15B9U-SM)

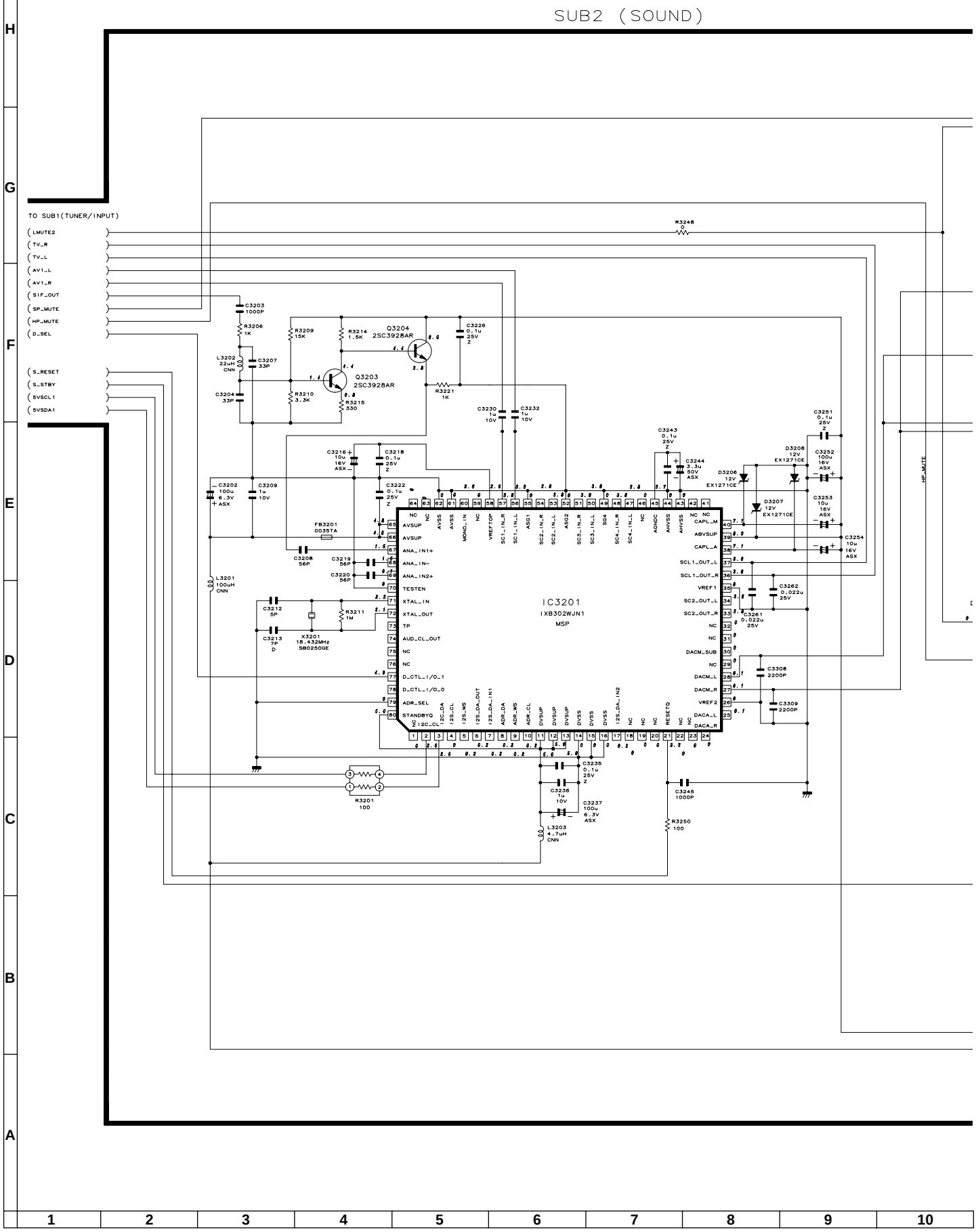

Downloaded from www.Manualslib.com manuals search engine

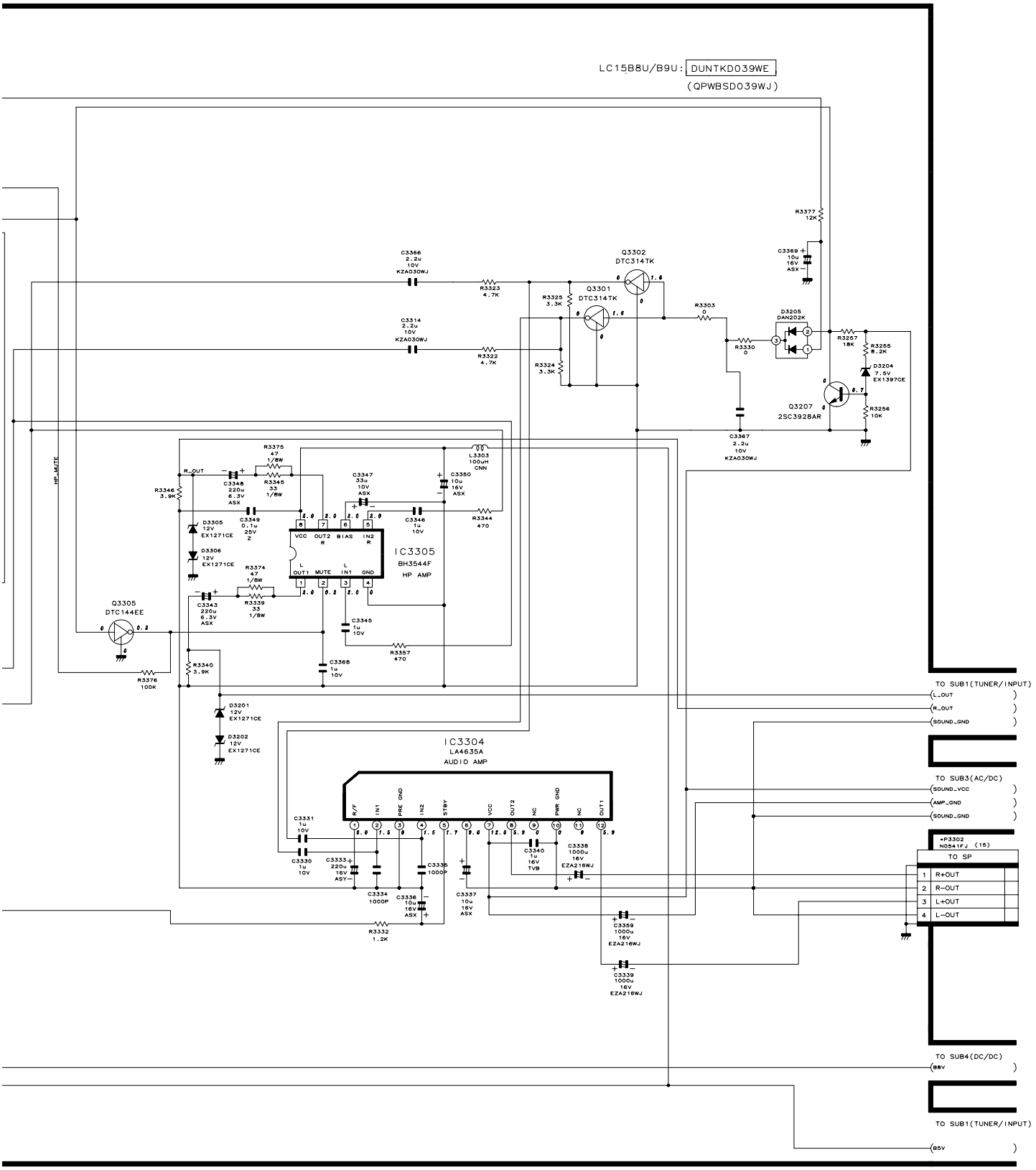

10	11	12	13	14	15	16	17	18	19

Downloaded from www.Manualslib.com manuals search engine

■SUB Unit-3/6 (LC-13B8U-S)

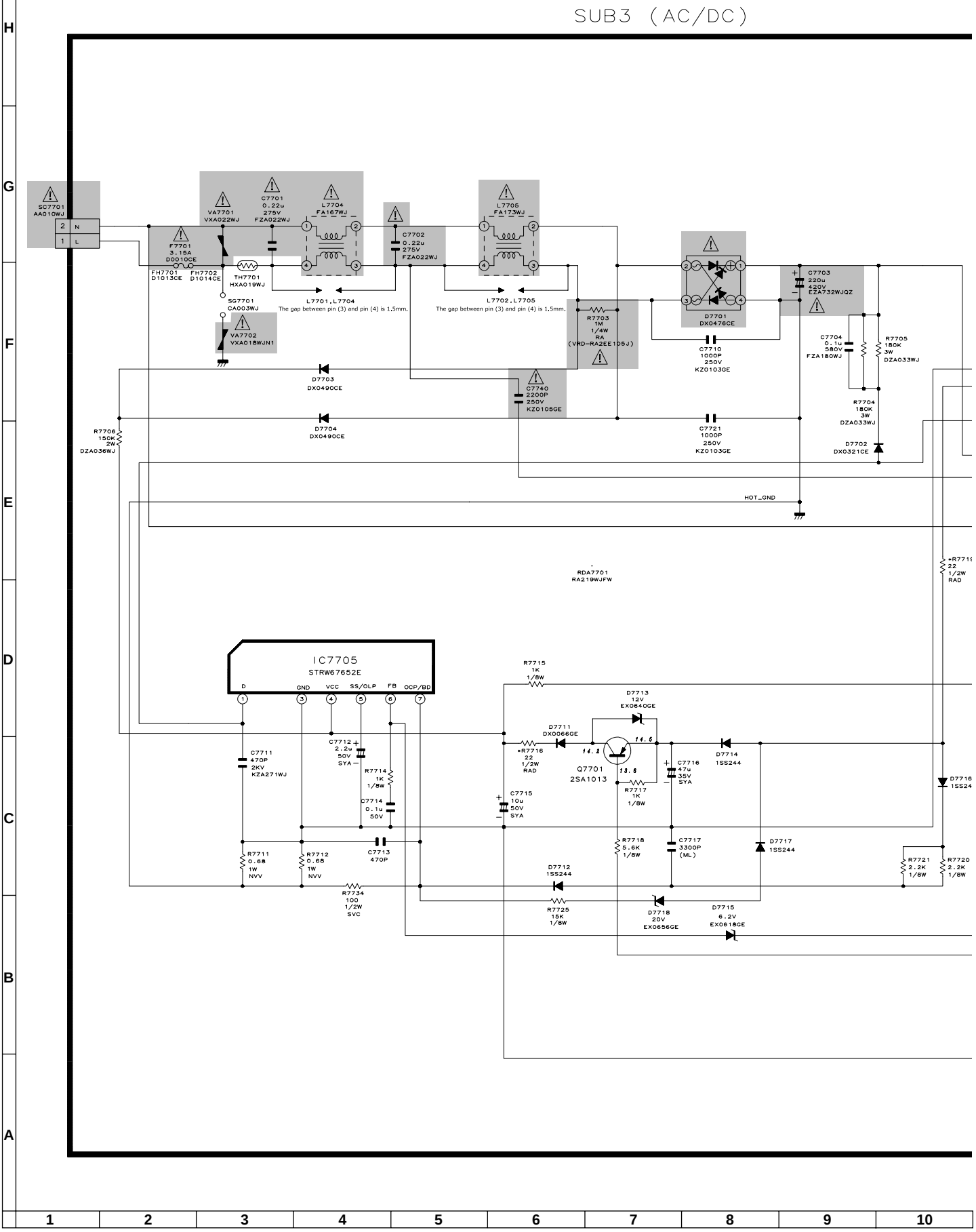

Downloaded from www.Manualslib.com manuals search engine

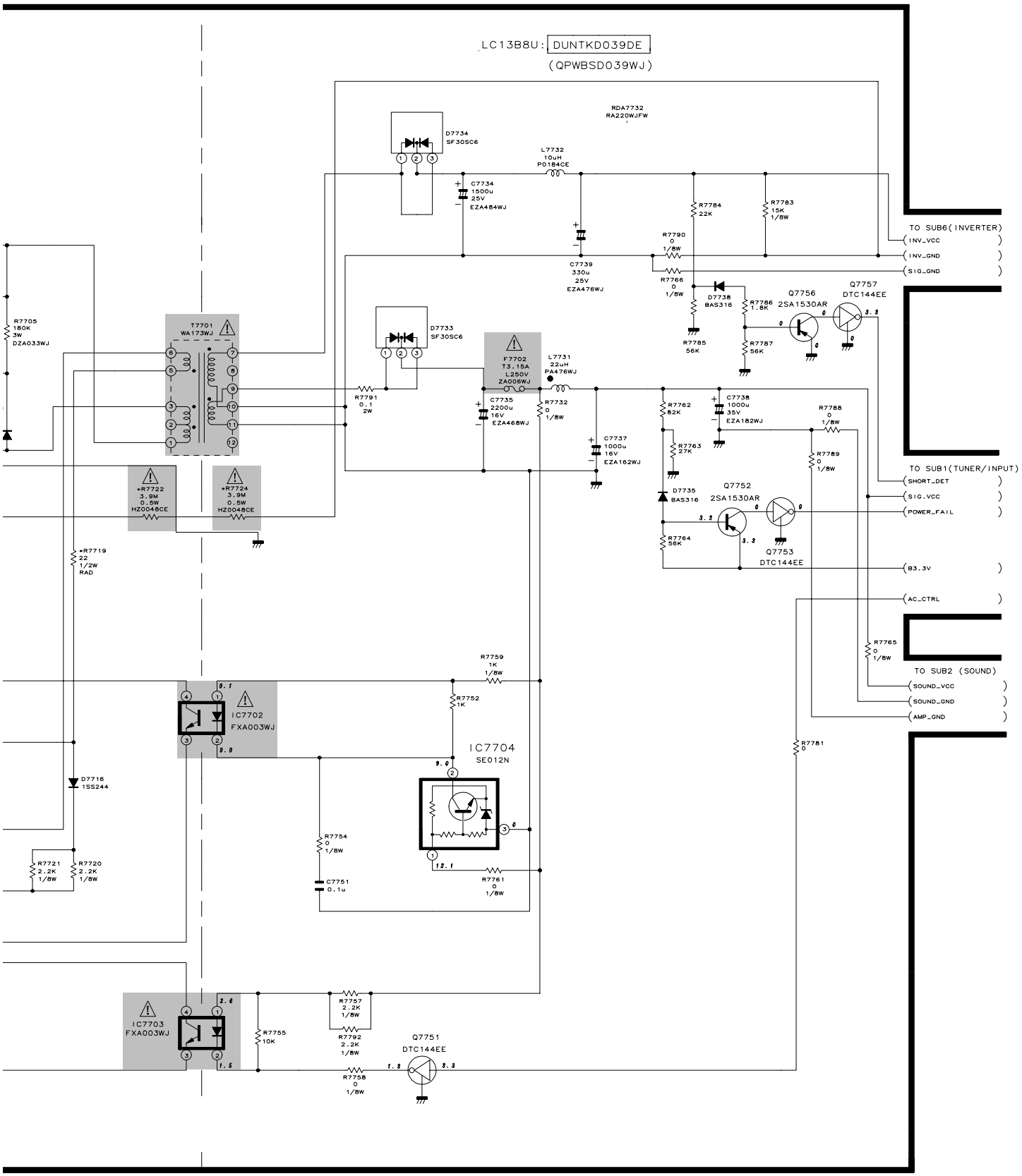

10	11	12	13	14	15	16	17	18	19

Downloaded from www.Manualslib.com manuals search engine

■SUB Unit-3/6 (LC-15B8U-S, LC-15B9U-SM)

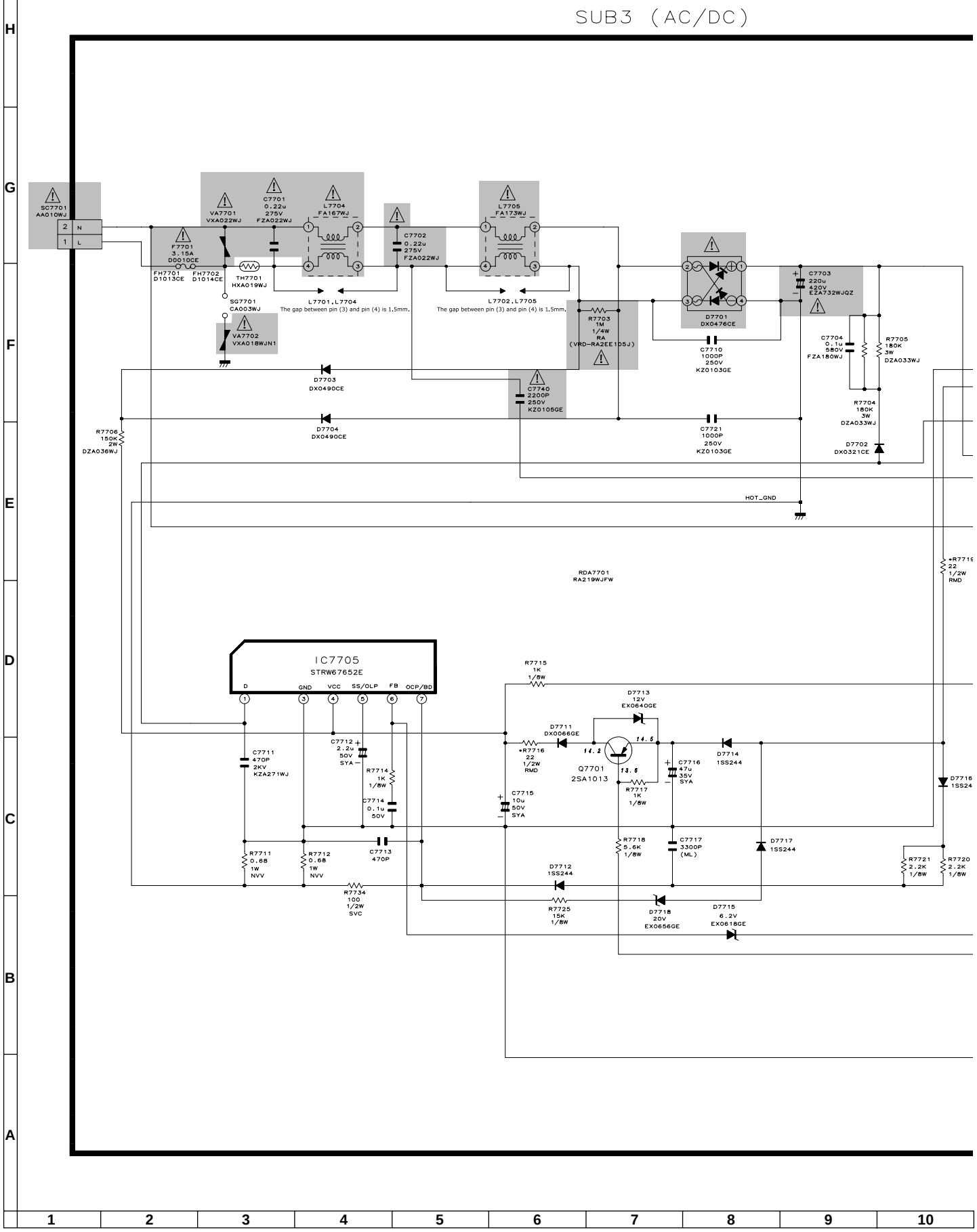

Downloaded from www.Manualslib.com manuals search engine

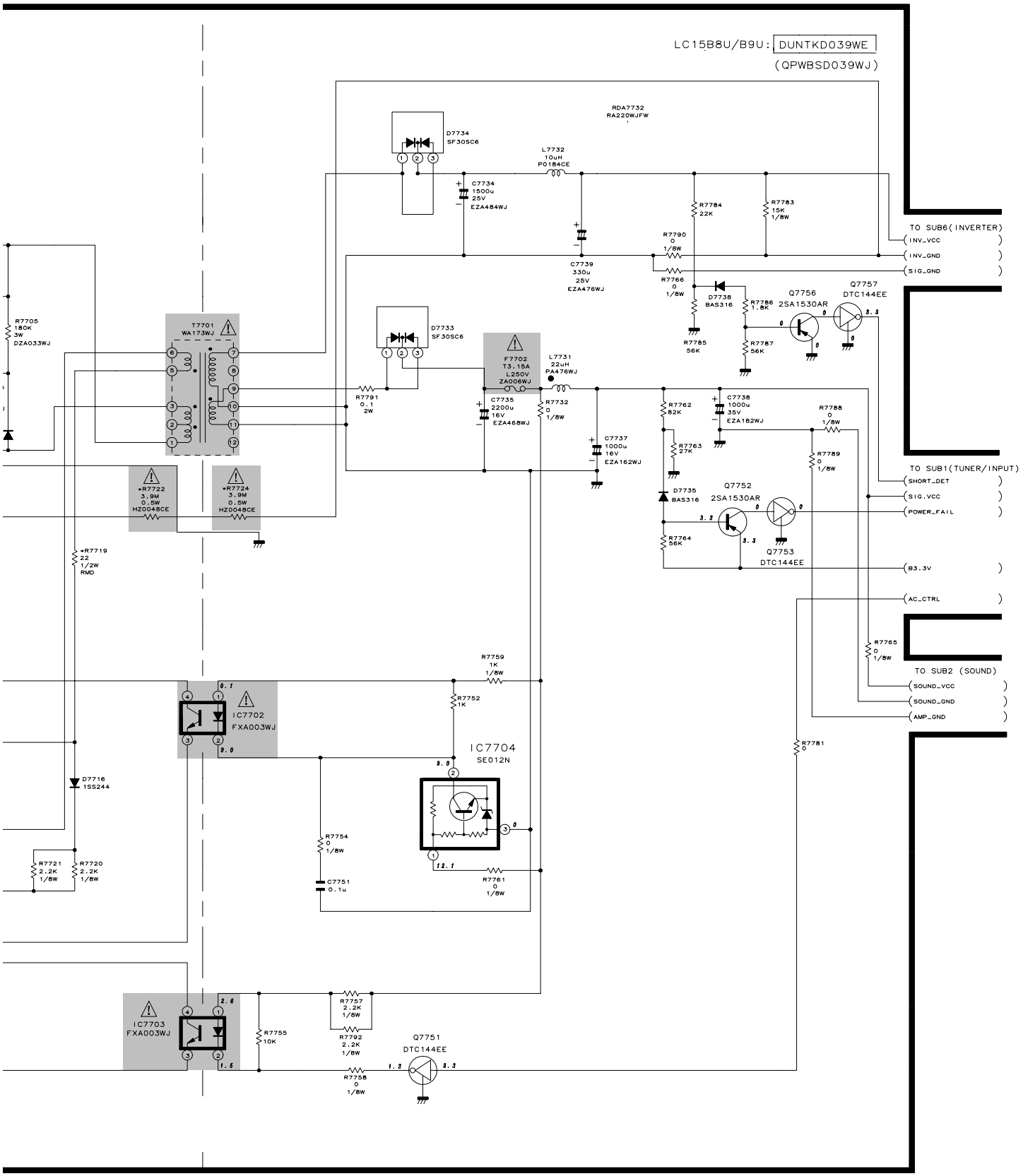

10	11	12	13	14	15	16	17	18	19

Downloaded from www.Manualslib.com manuals search engine

■SUB Unit-4/6

SUB4 (DC/DC)

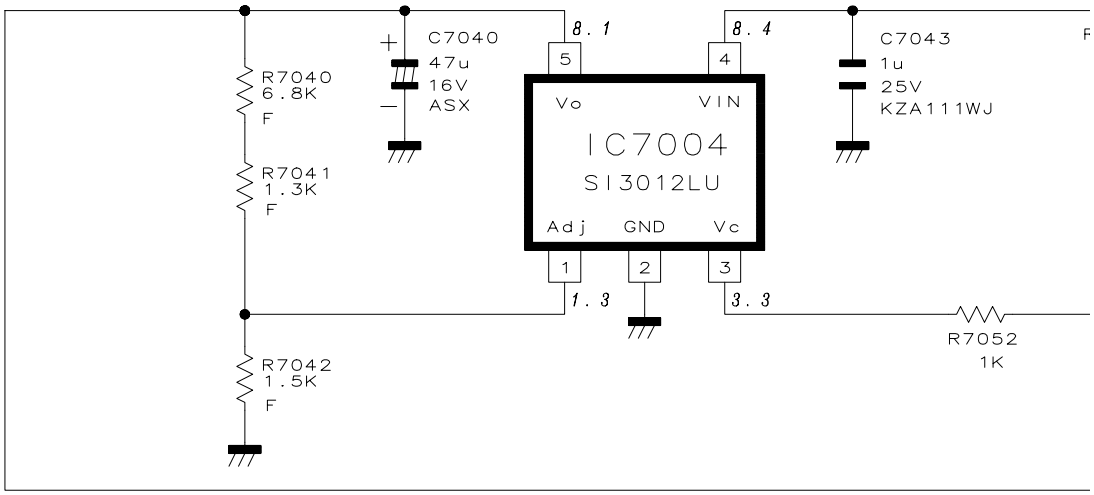

Downloaded from www.Manualslib.com manuals search engine

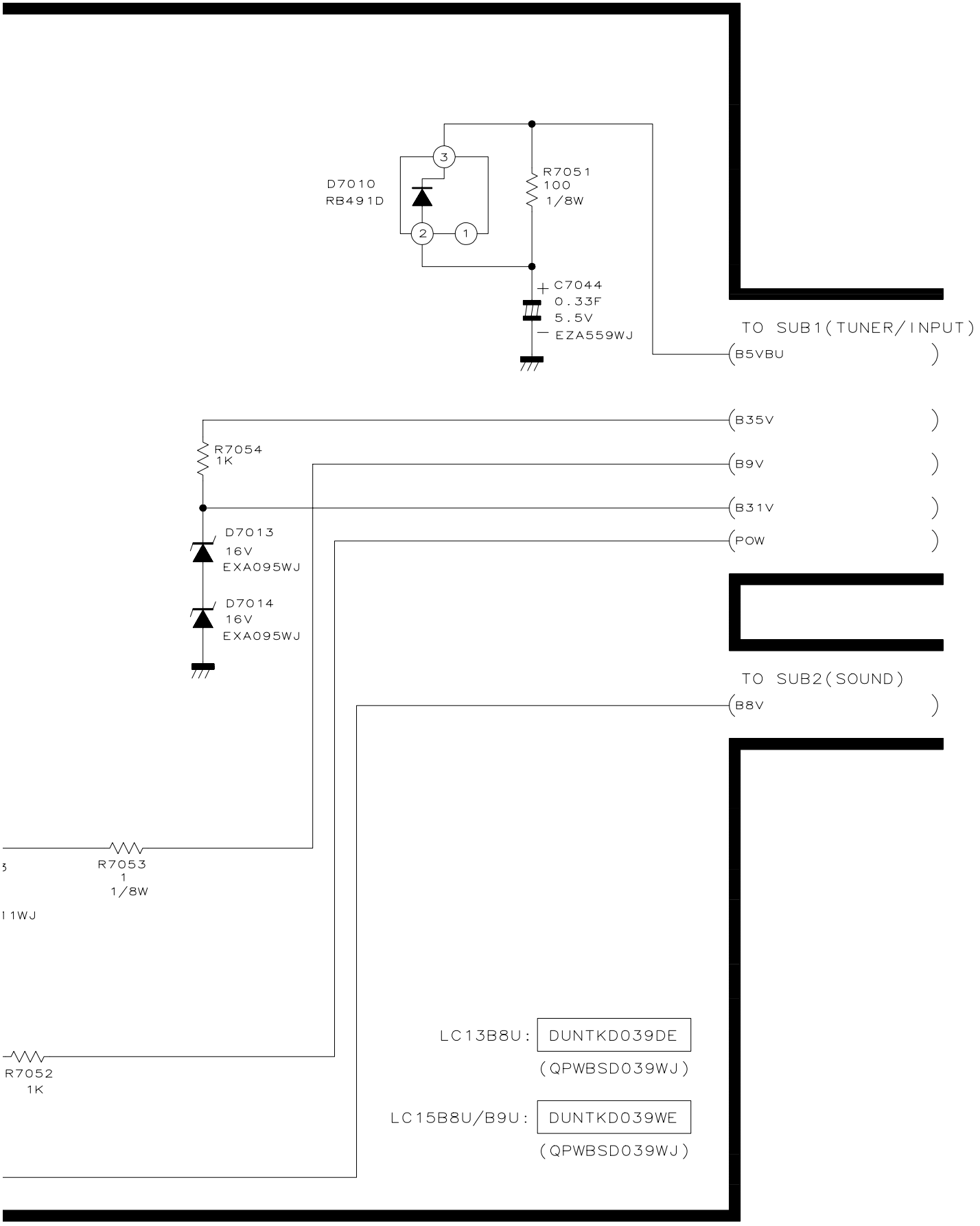

10	11	12	13	14	15	16	17	18	19

Downloaded from www.Manualslib.com manuals search engine

■SUB Unit-5/6

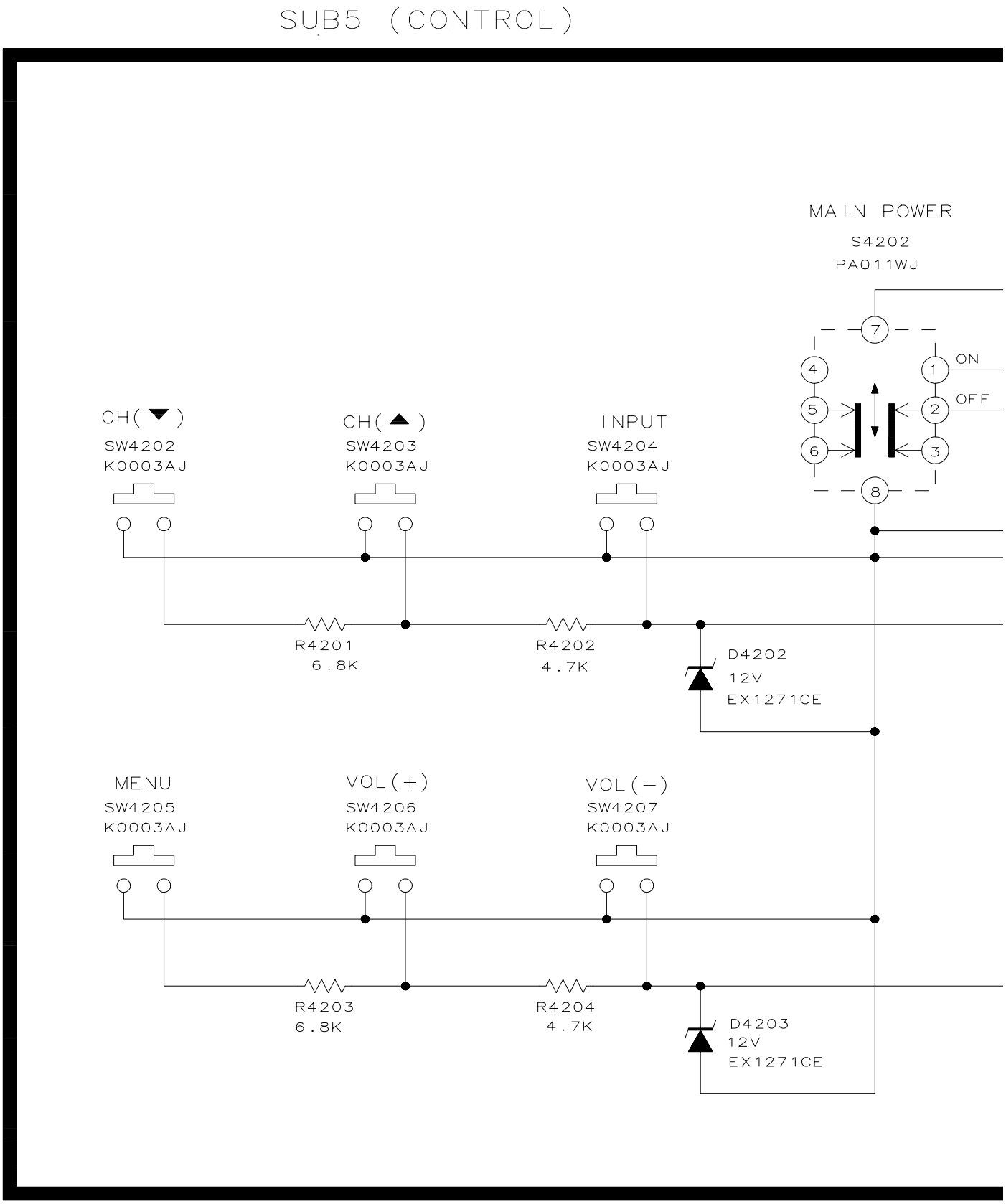

Downloaded from www.Manualslib.com manuals search engine

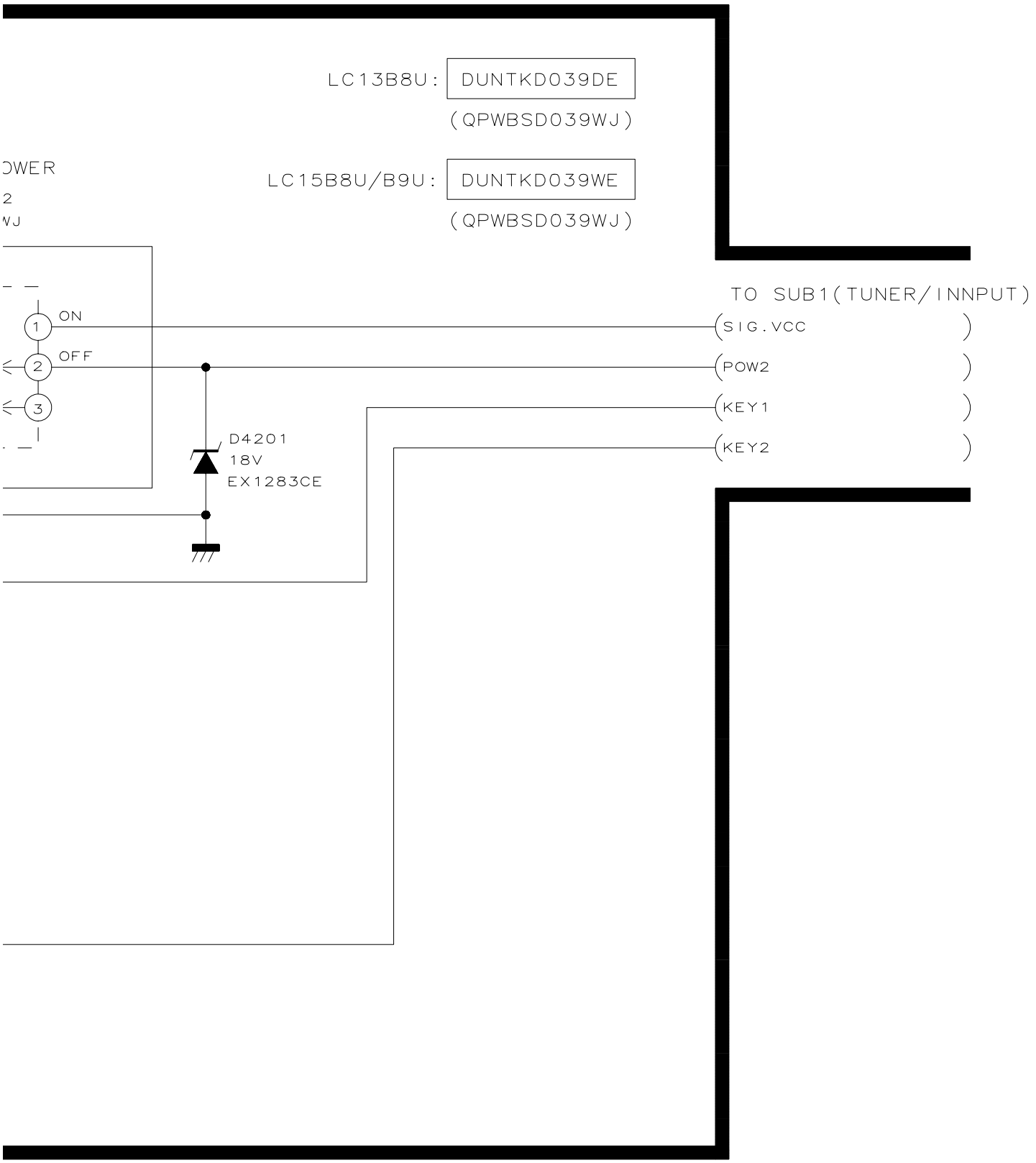

10	11	12	13	14	15	16	17	18	19

Downloaded from www.Manualslib.com manuals search engine

■SUB Unit-6/6 (LC-13B8U-S)

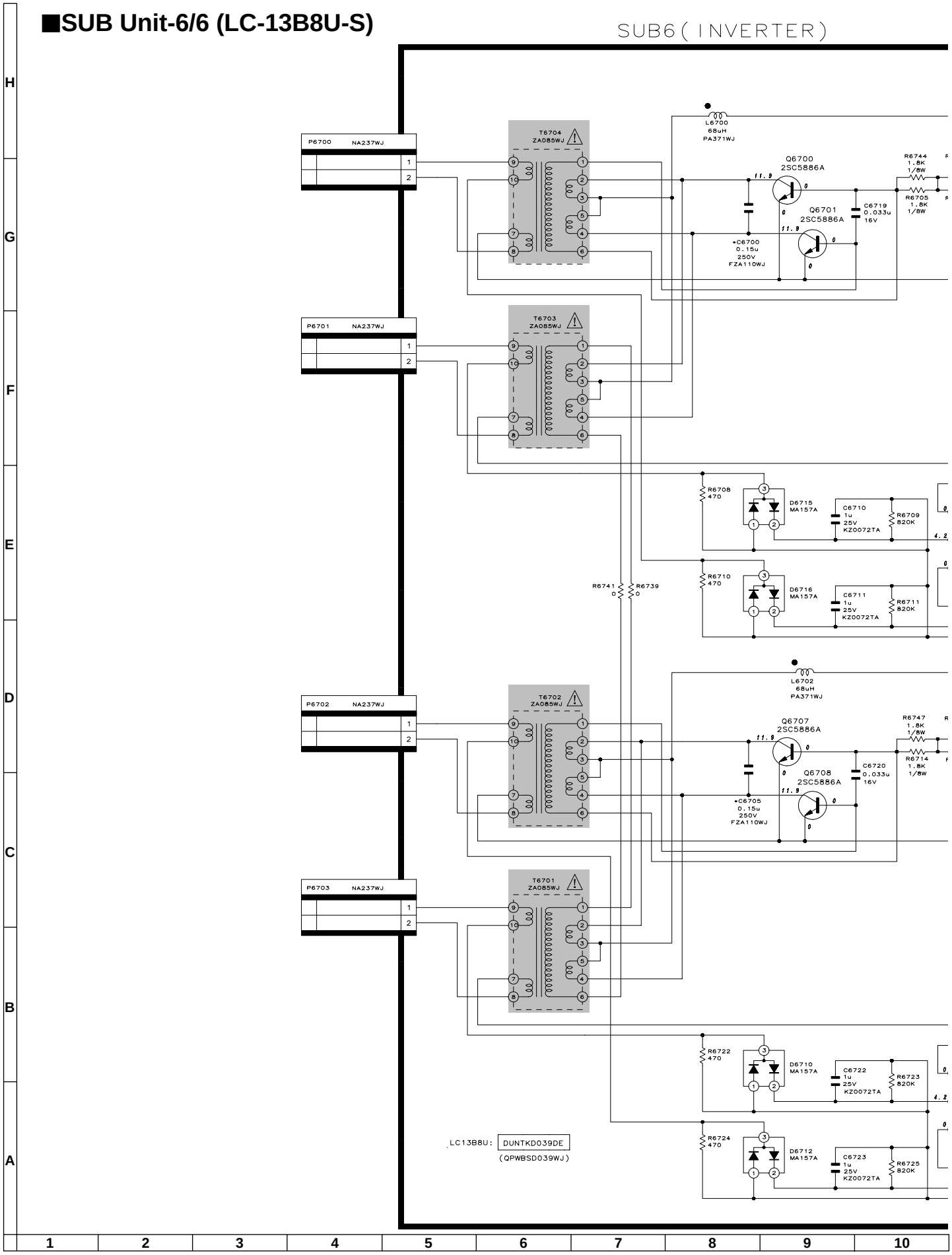

Downloaded from www.Manualslib.com manuals search engine

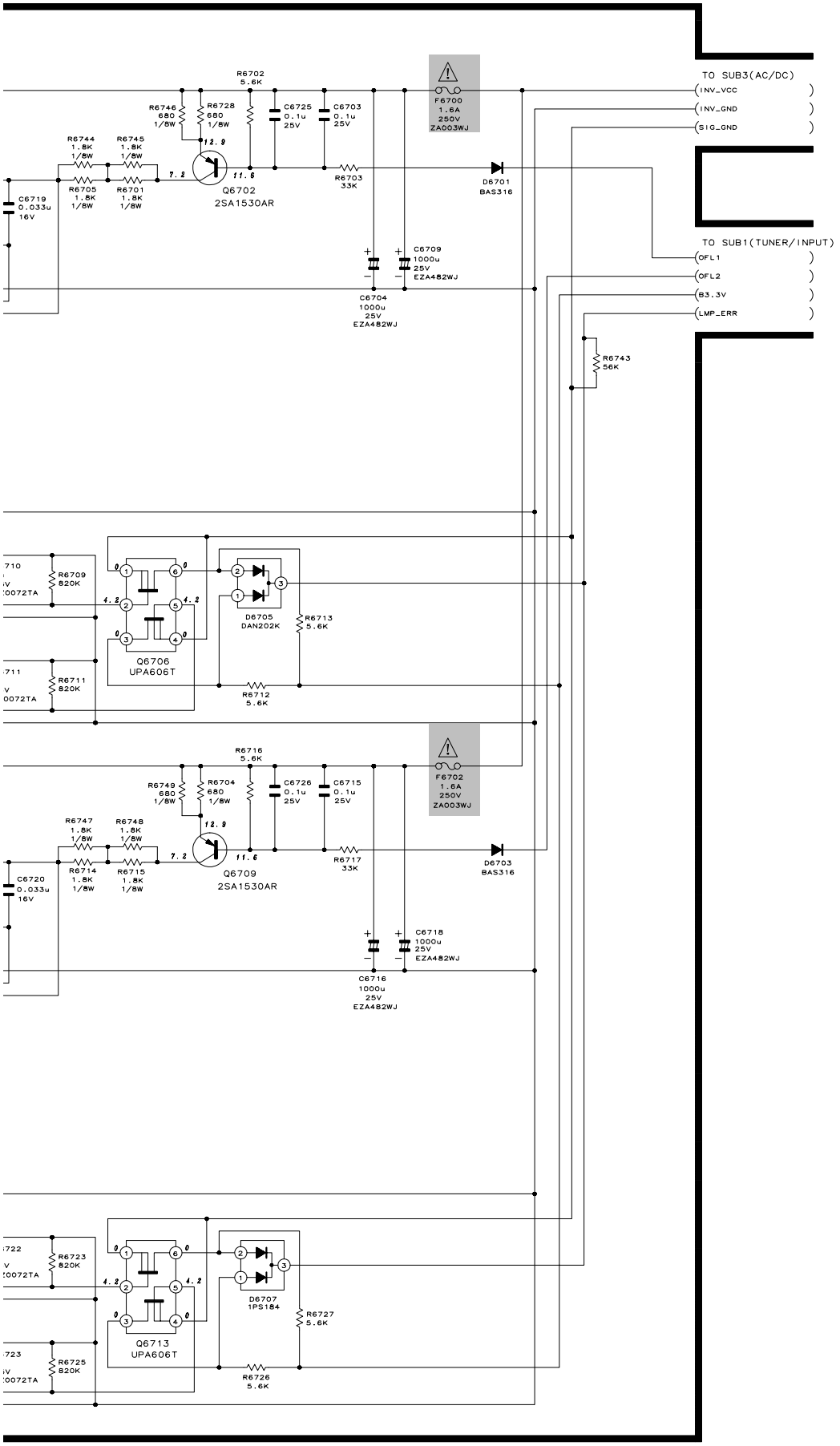

10	11	12	13	14	15	16	17	18	19

Downloaded from www.Manualslib.com manuals search engine

■SUB Unit-6/6 (LC-15B8U-S, LC-15B9U-SM)

SUB6 (INVERTER)

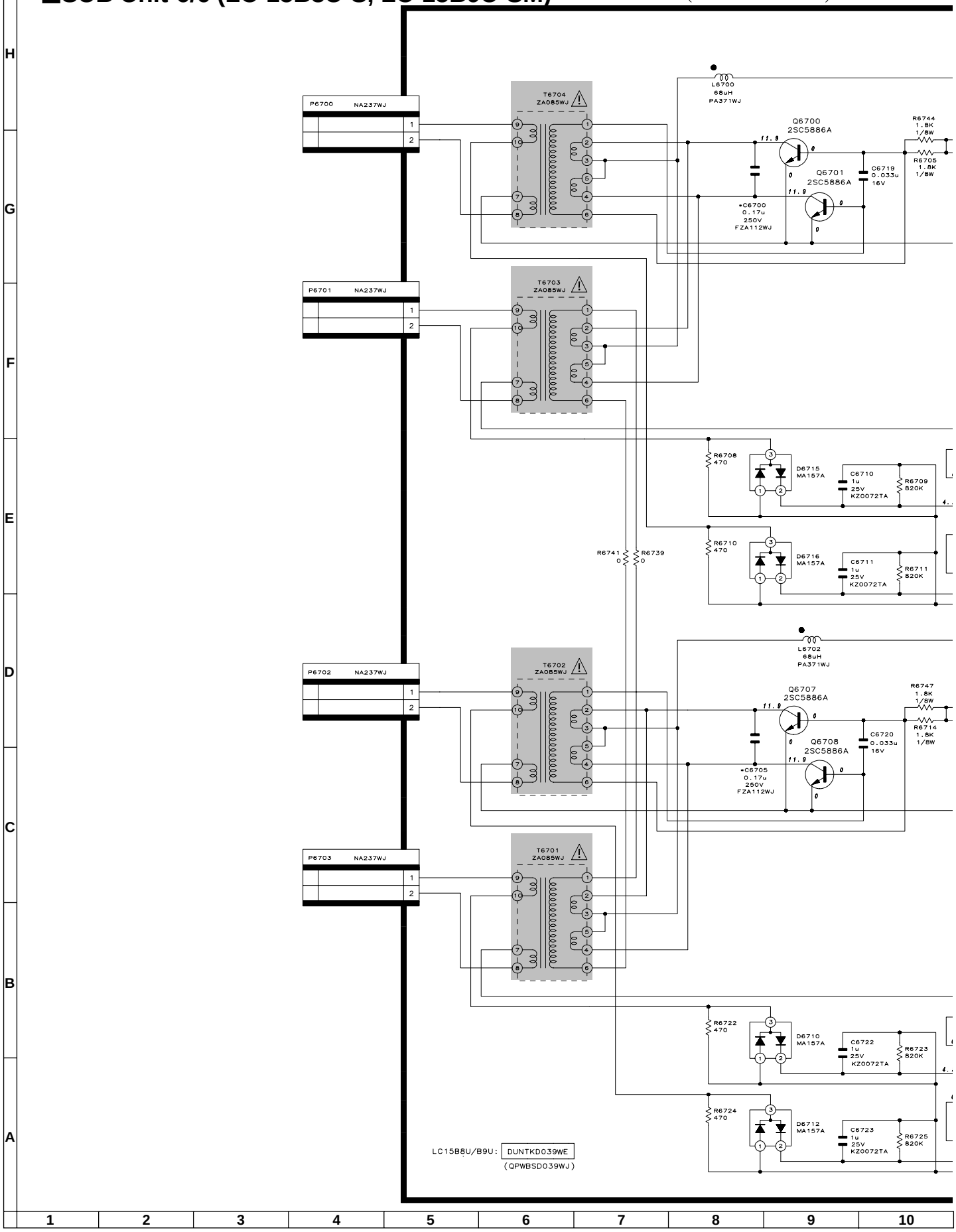

Downloaded from www.Manualslib.com manuals search engine

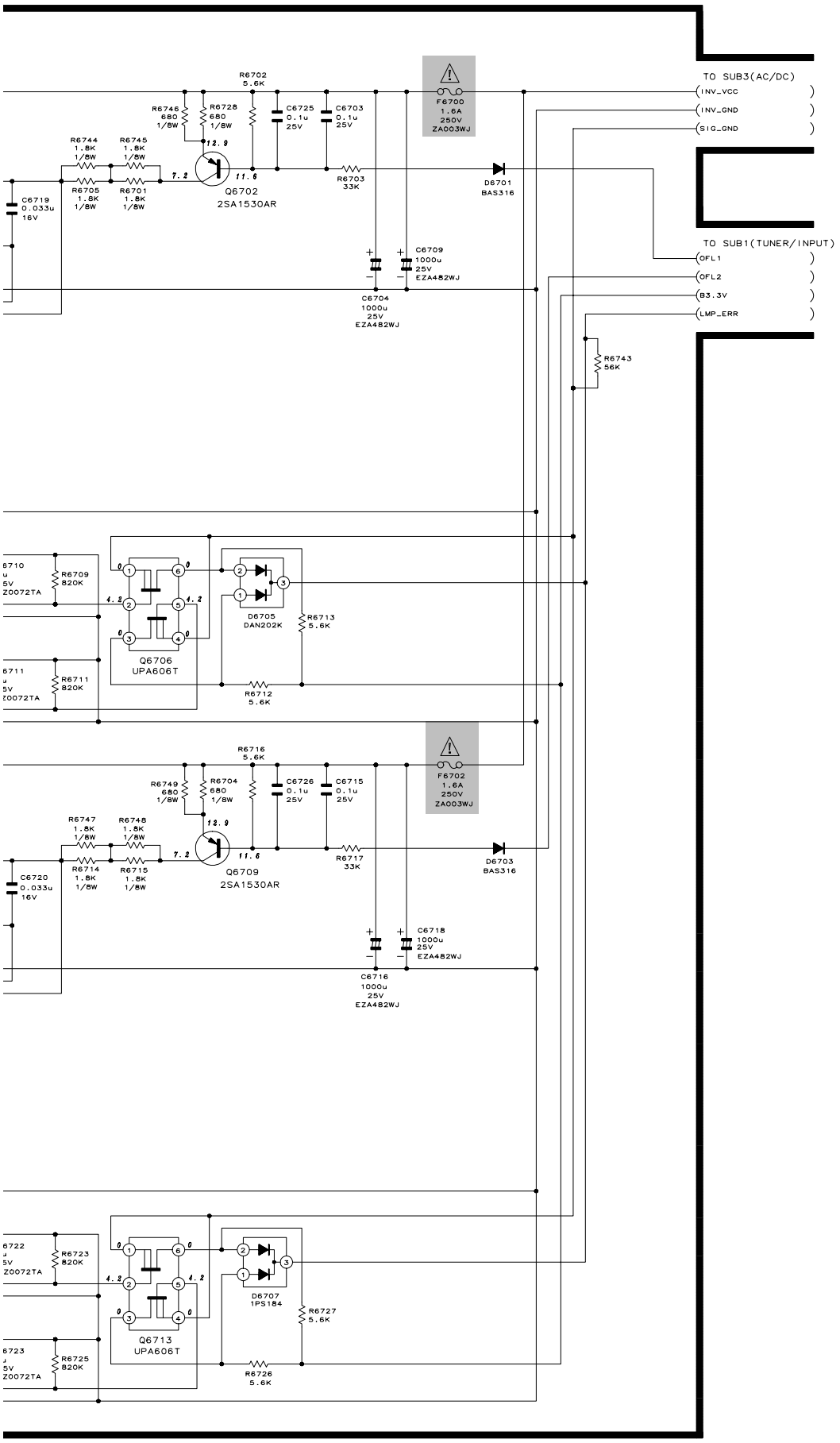

10	11	12	13	14	15	16	17	18	19

Downloaded from www.Manualslib.com manuals search engine

PRINTED WIRING BOARD ASSEMBLIES

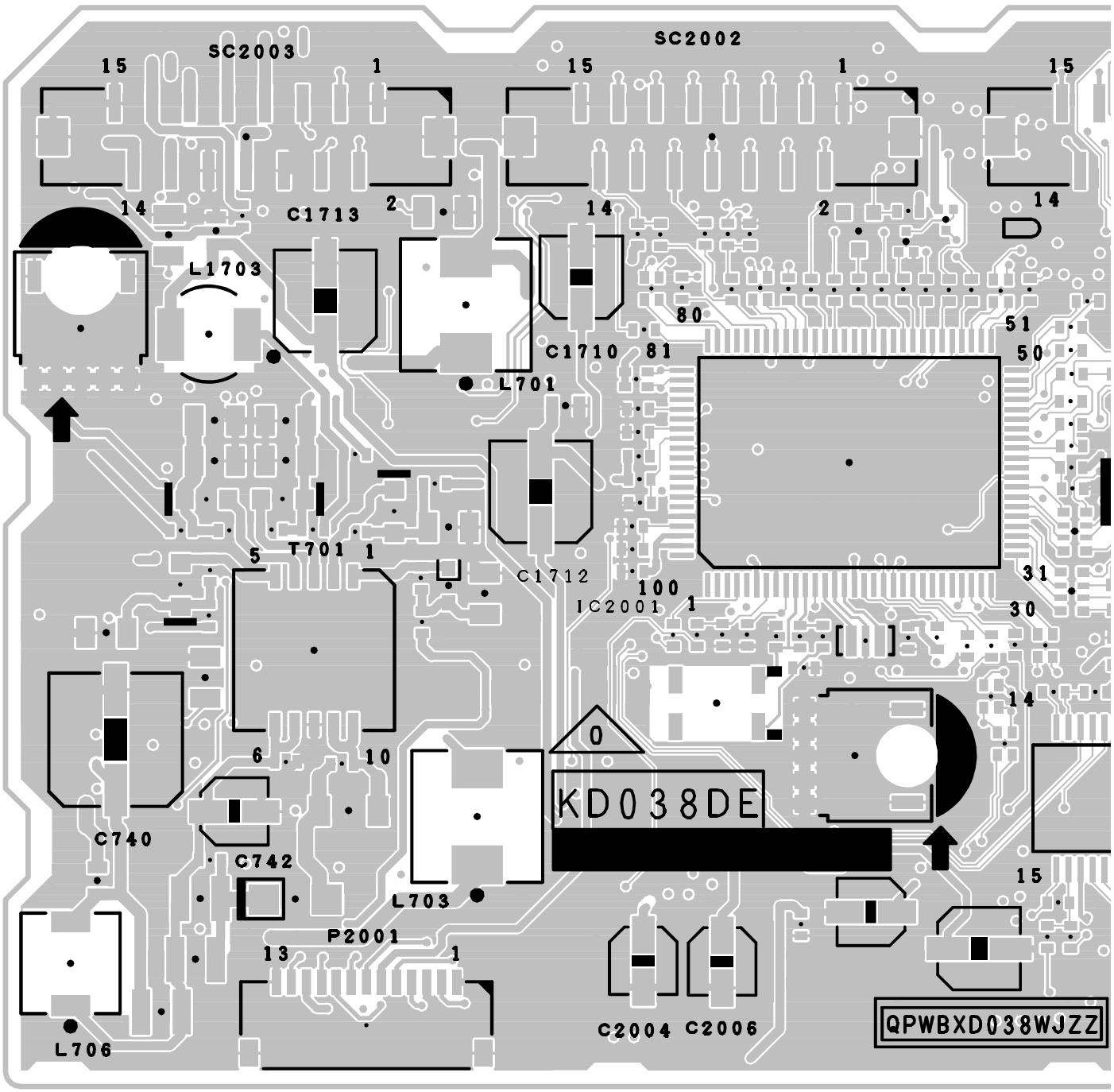

MAIN Unit (Side-A)

Downloaded from www.Manualslib.com manuals search engine

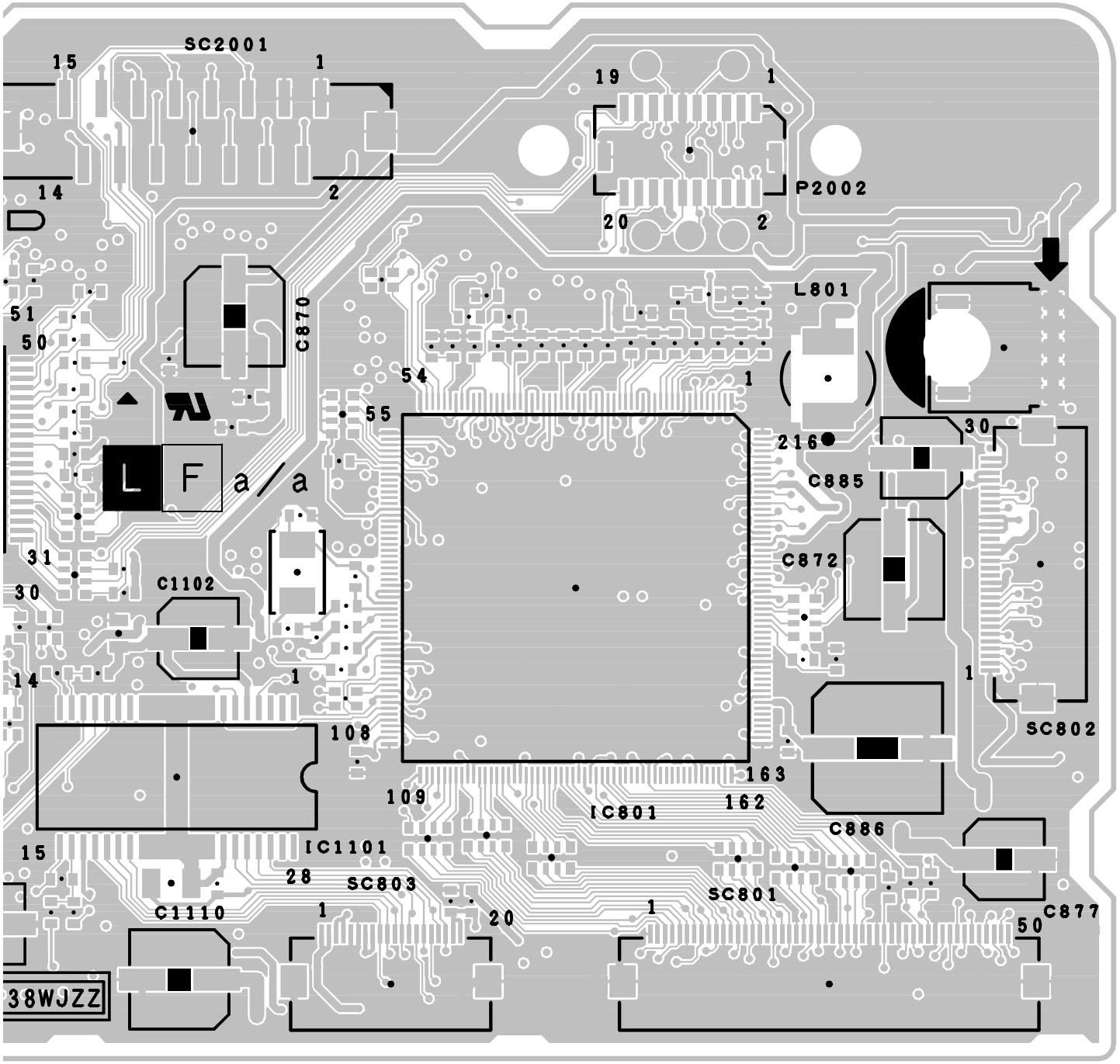

10	11	12	13	14	15	16	17	18	19

Downloaded from www.Manualslib.com manuals search engine

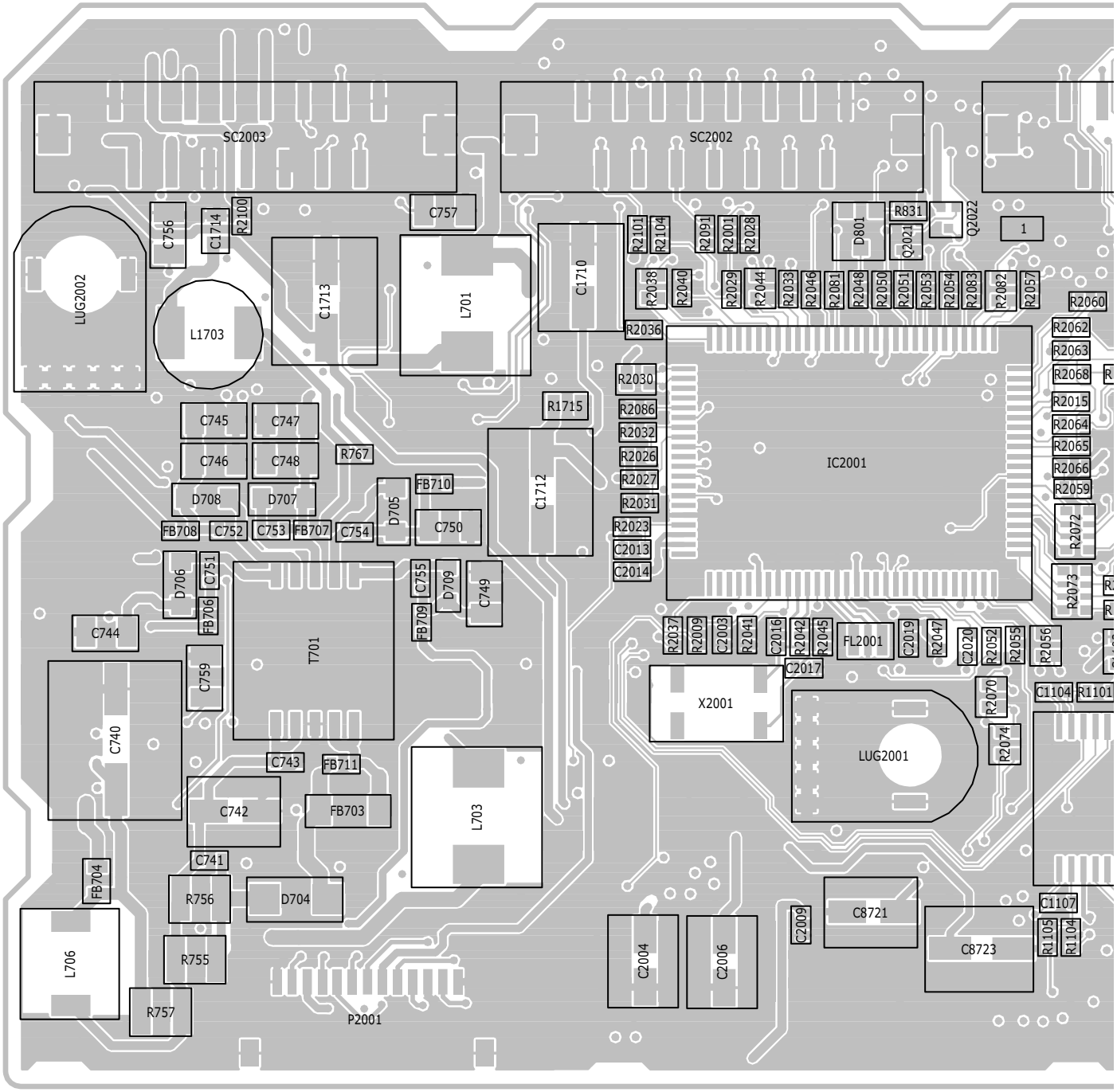

MAIN Unit (Chip Parts Side-A)

Downloaded from www.Manualslib.com manuals search engine

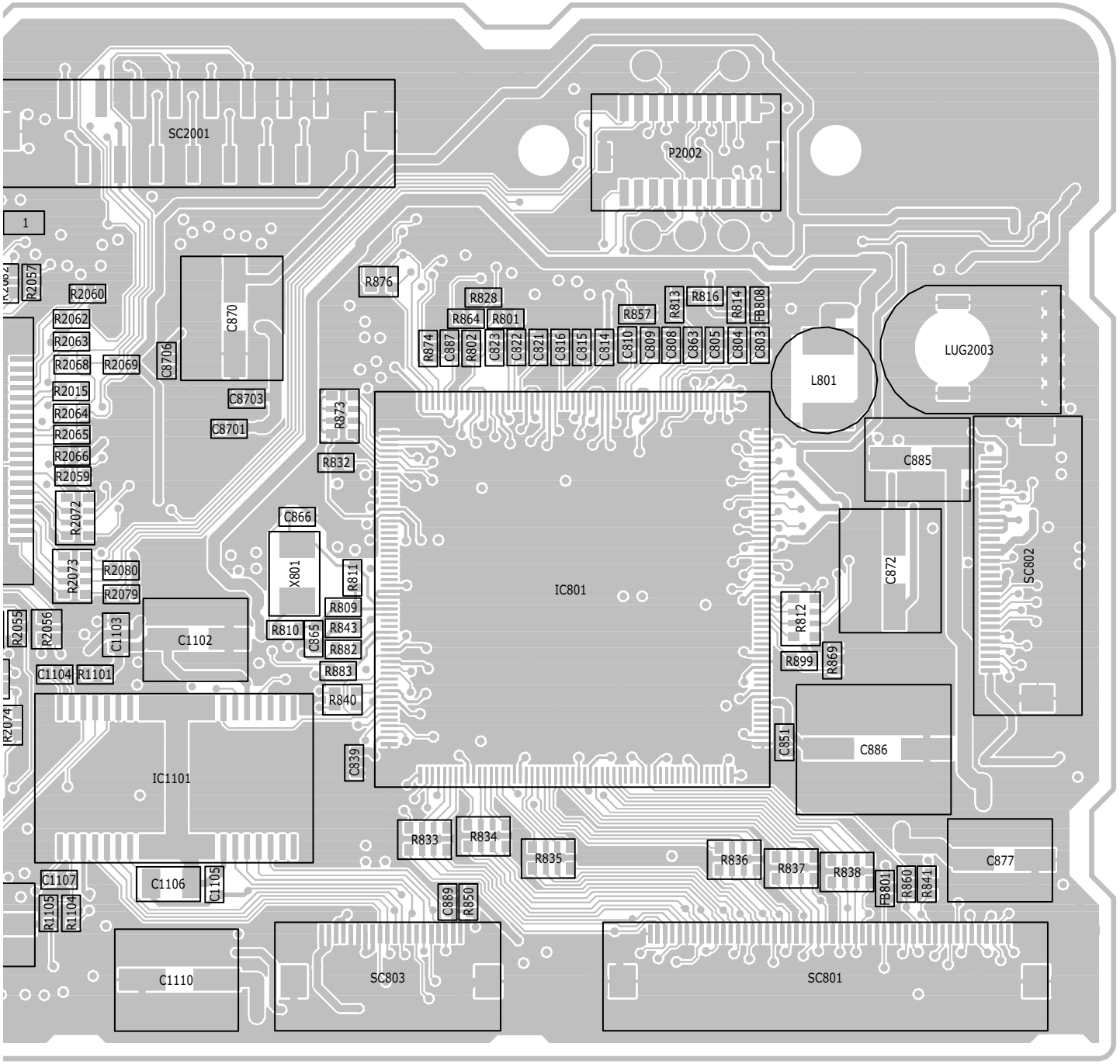

10	11	12	13	14	15	16	17	18	19

Downloaded from www.Manualslib.com manuals search engine

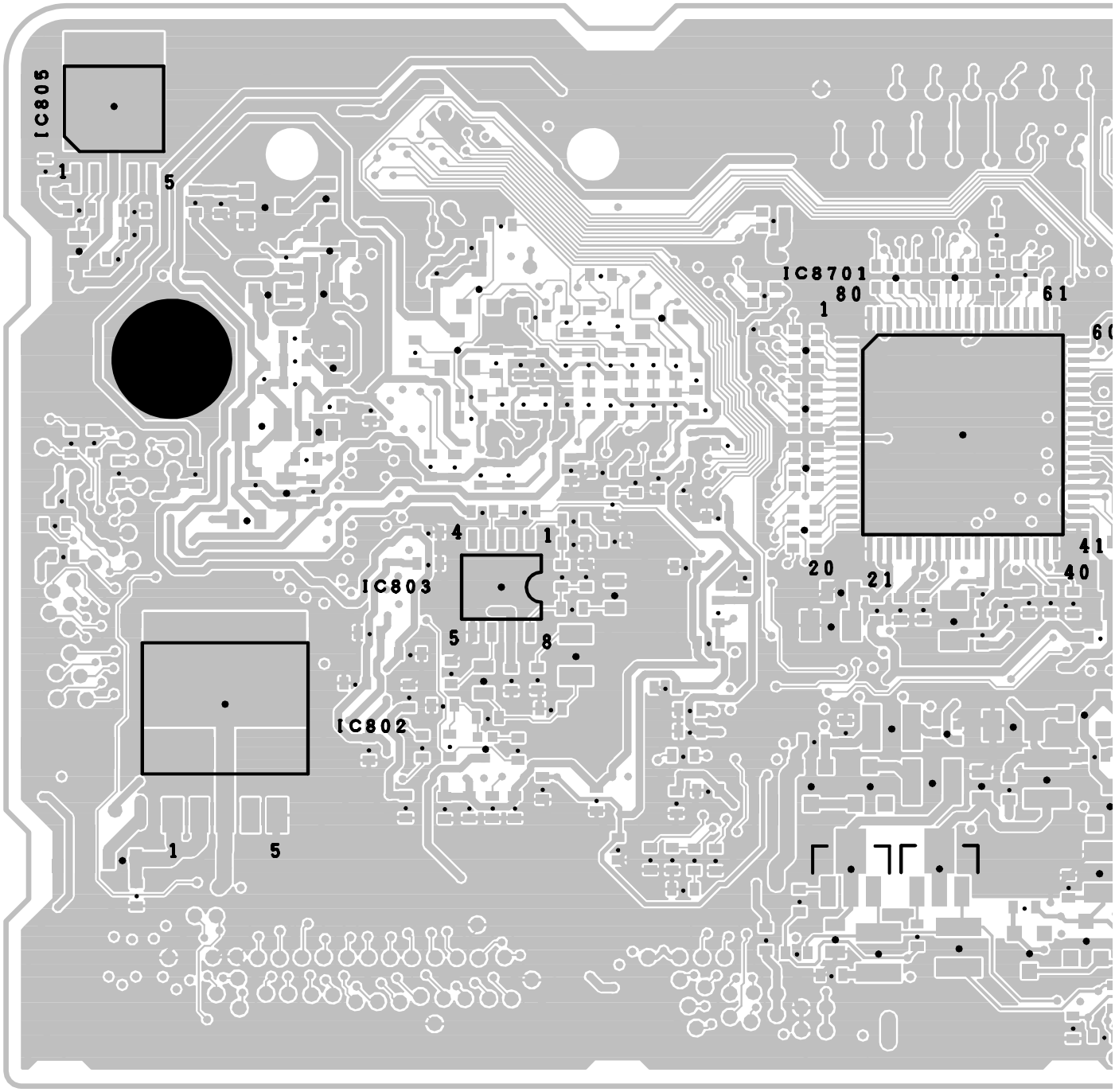

MAIN Unit (Side-B)

Downloaded from www.Manualslib.com manuals search engine

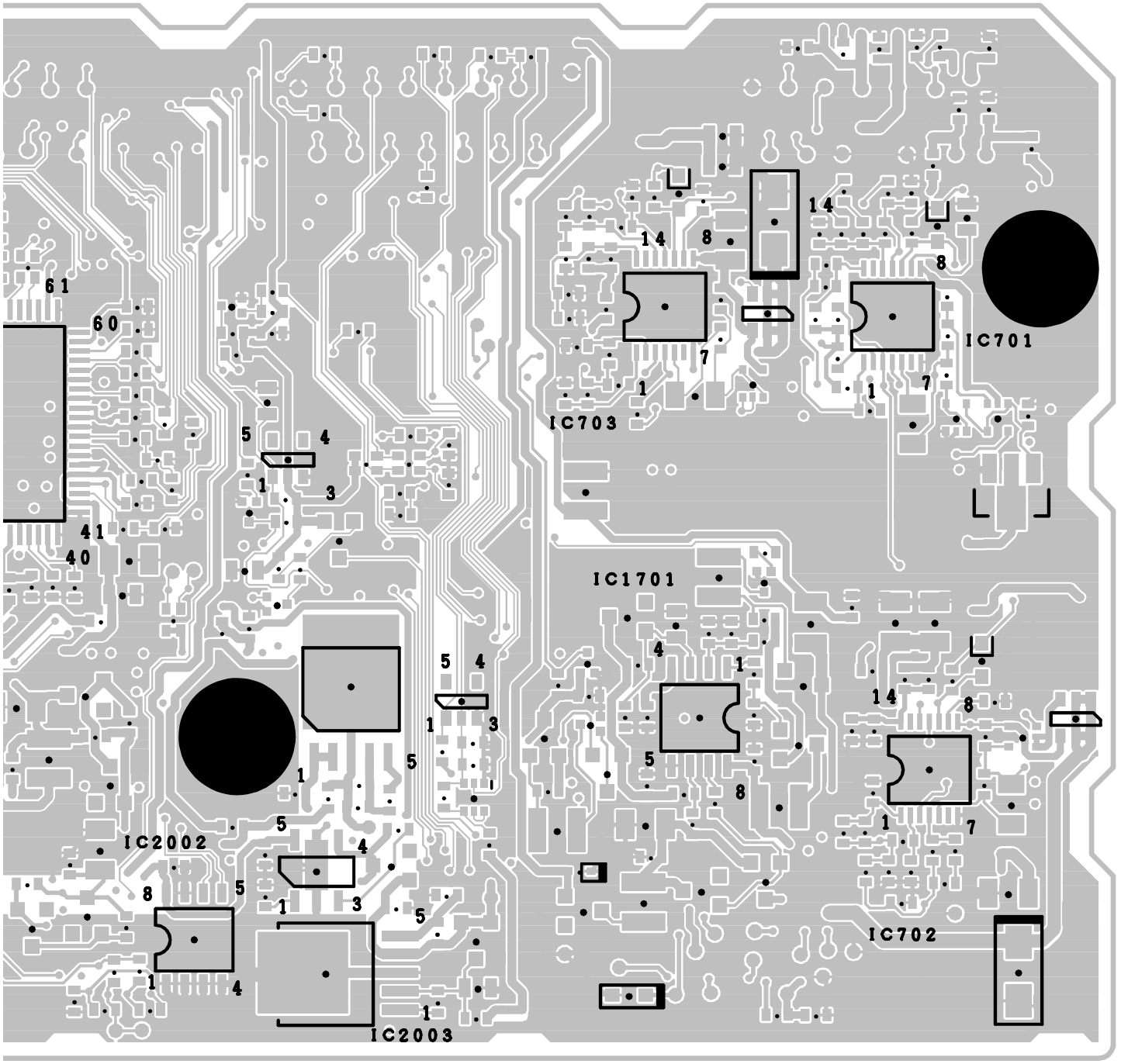

10	11	12	13	14	15	16	17	18	19

Downloaded from www.Manualslib.com manuals search engine

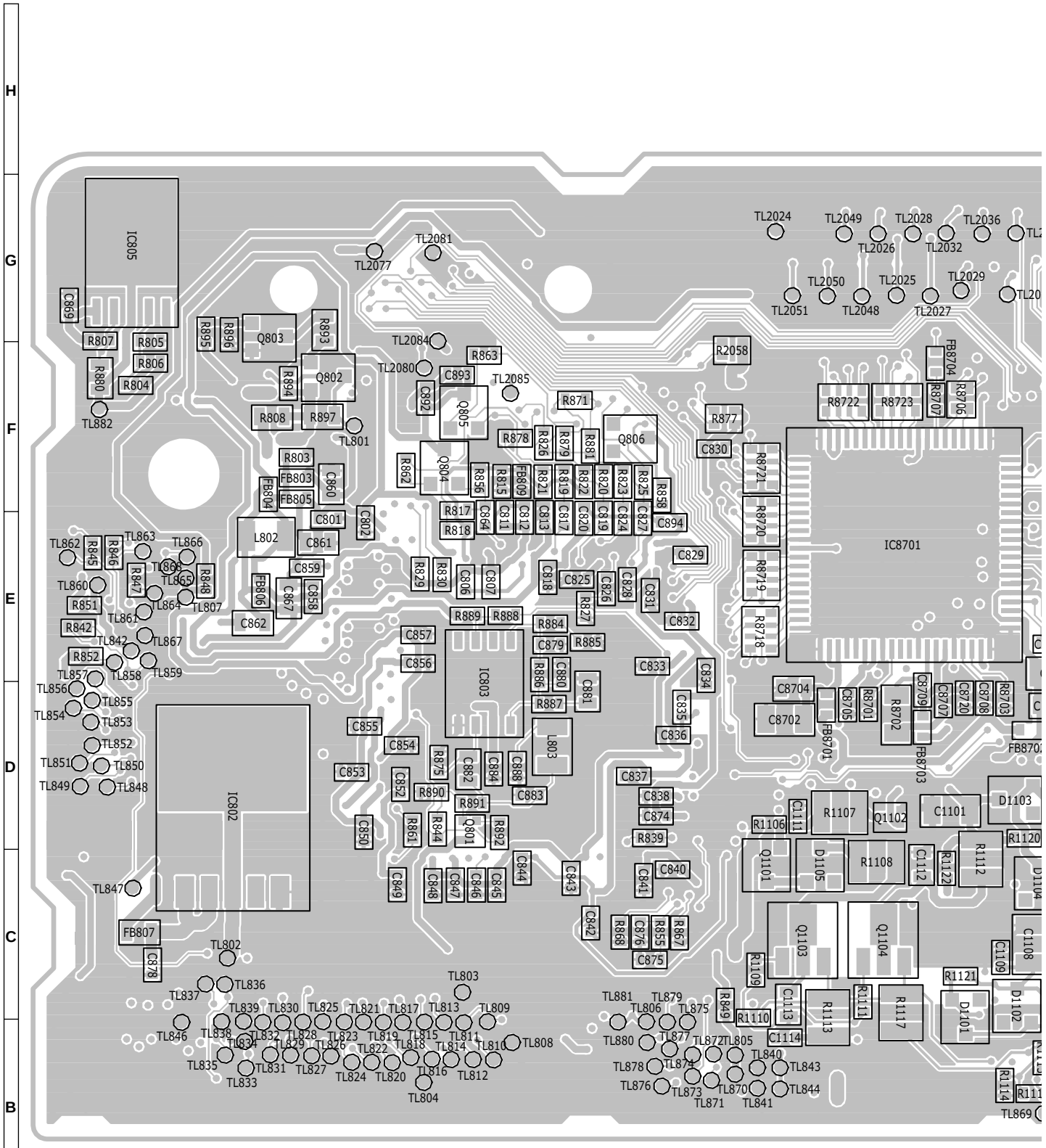

MAIN Unit (Chip Parts Side-B)

Downloaded from www.Manualslib.com manuals search engine

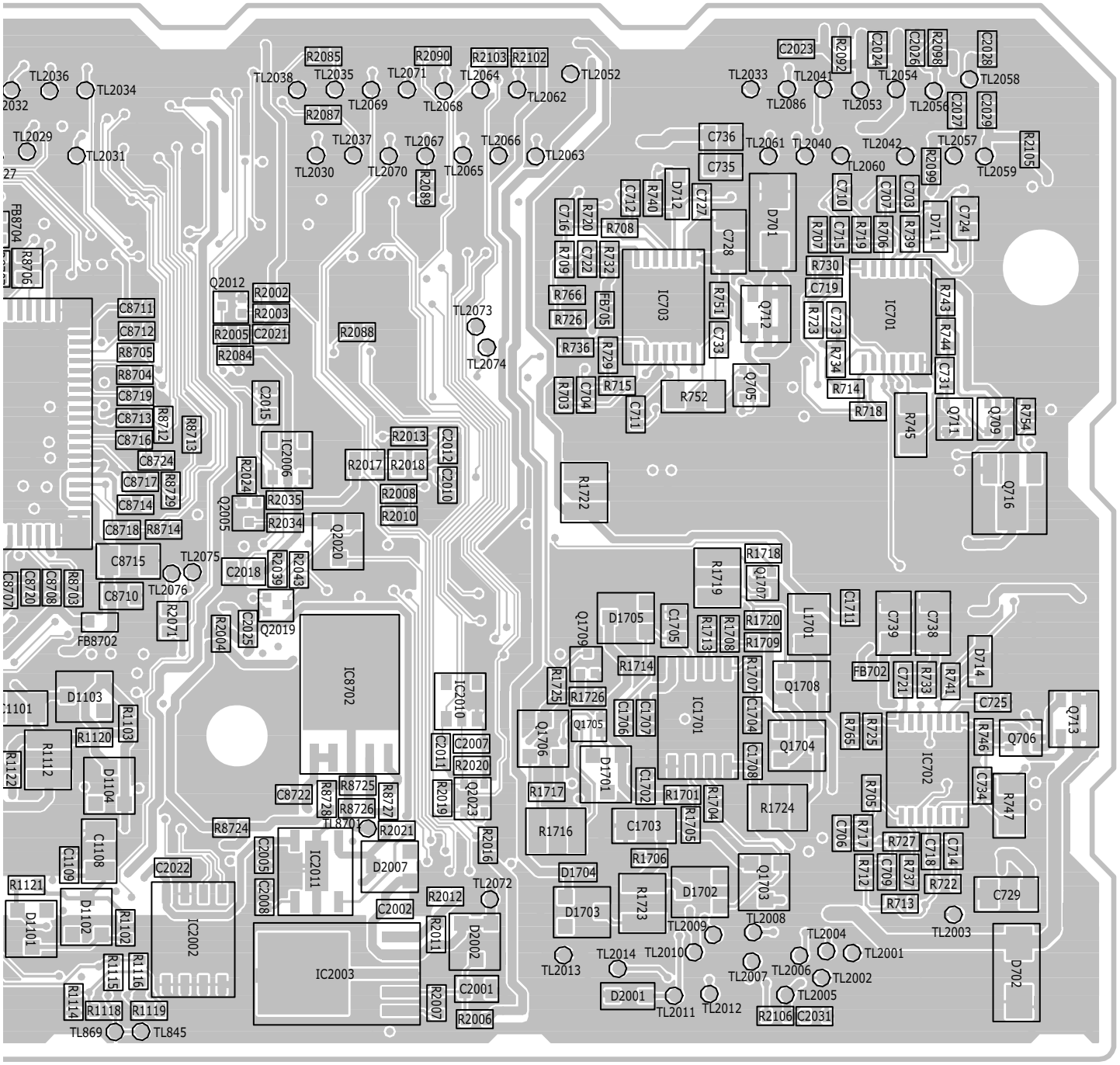

10	11	12	13	14	15	16	17	18	19

Downloaded from www.Manualslib.com manuals search engine

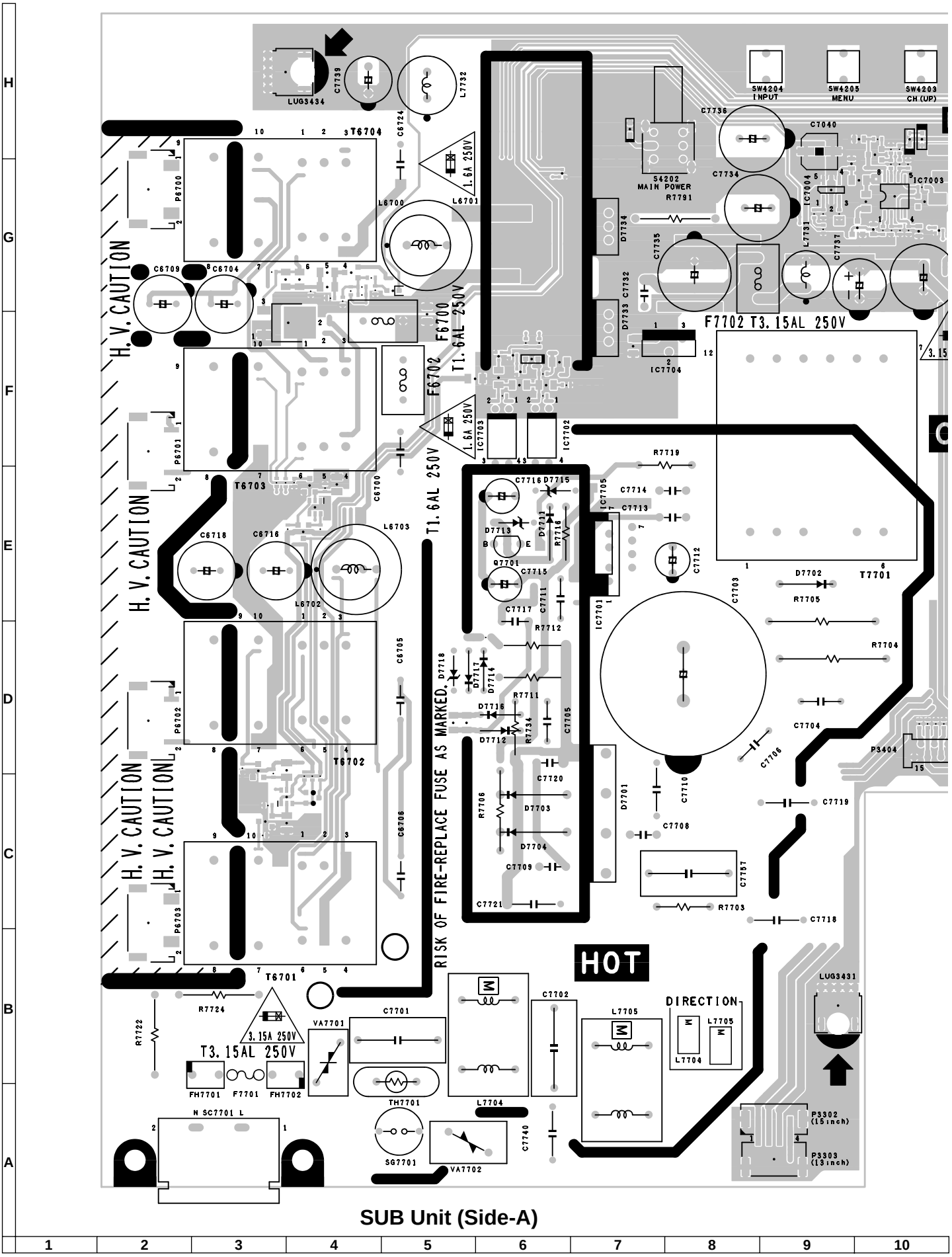

SUB Unit (Side-A)

Downloaded from www.Manualslib.com manuals search engine

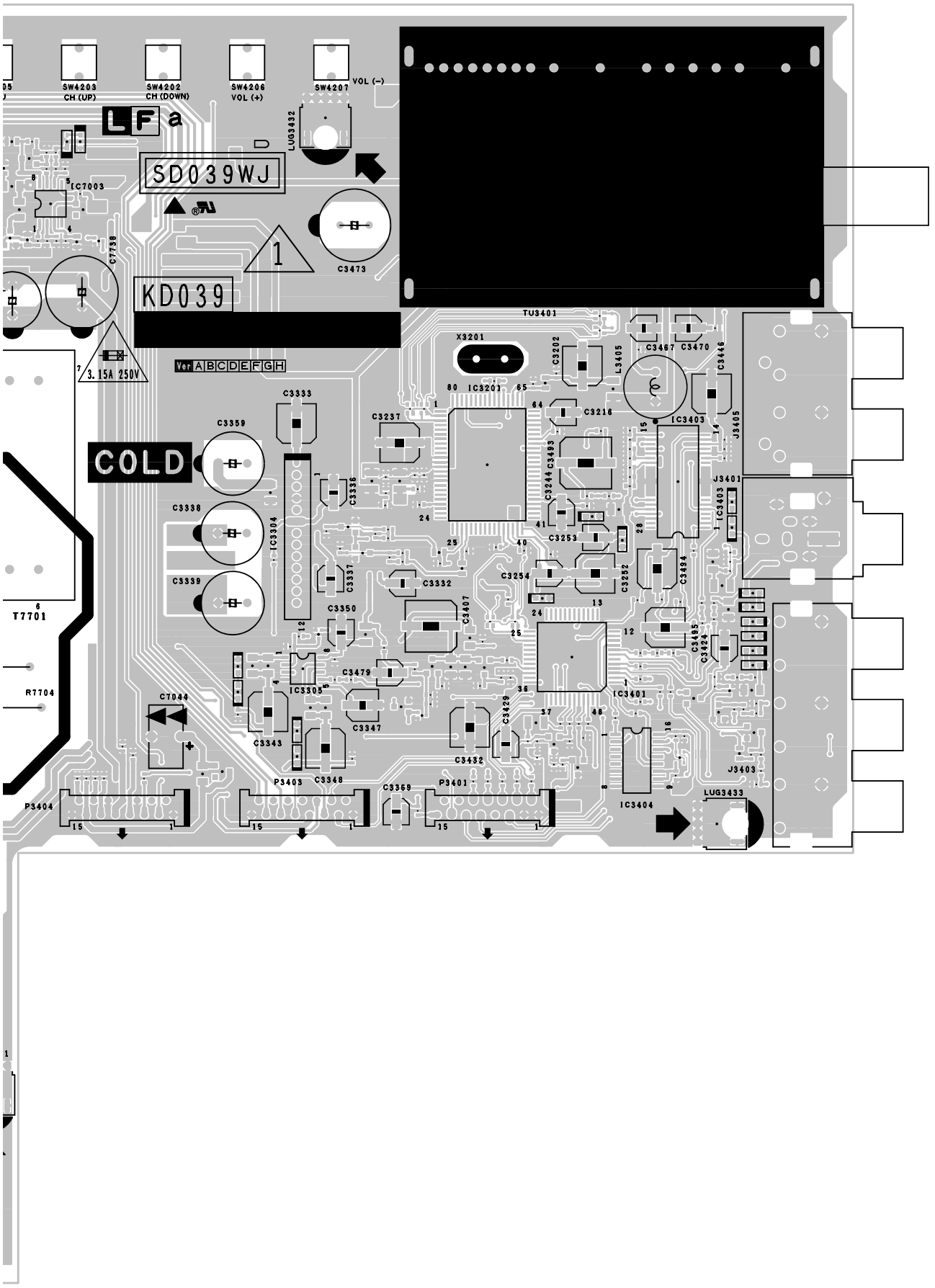

10	11	12	13	14	15	16	17	18	19

Downloaded from www.Manualslib.com manuals search engine

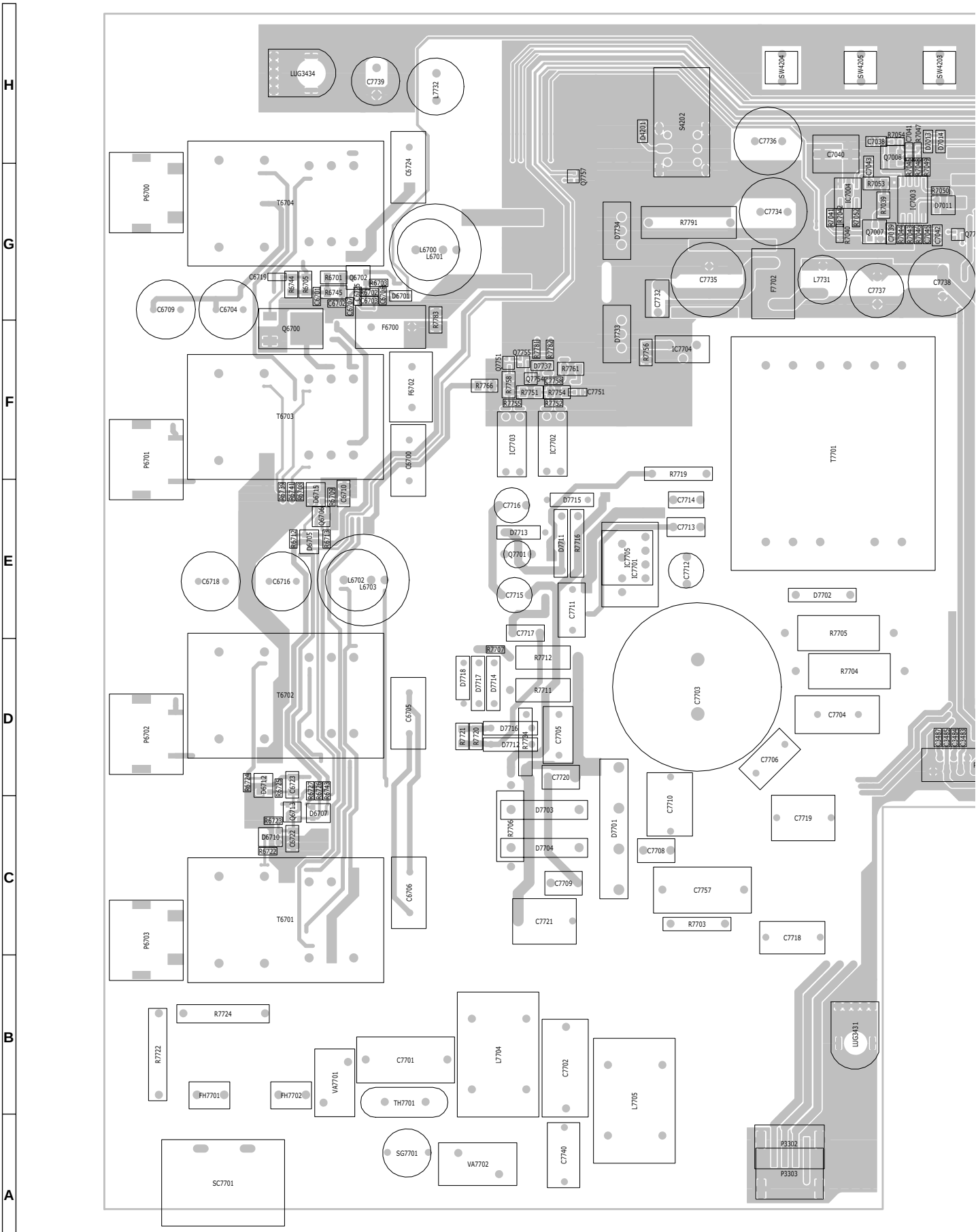

SUB Unit (Chip Parts Side-A)

Downloaded from www.Manualslib.com manuals search engine

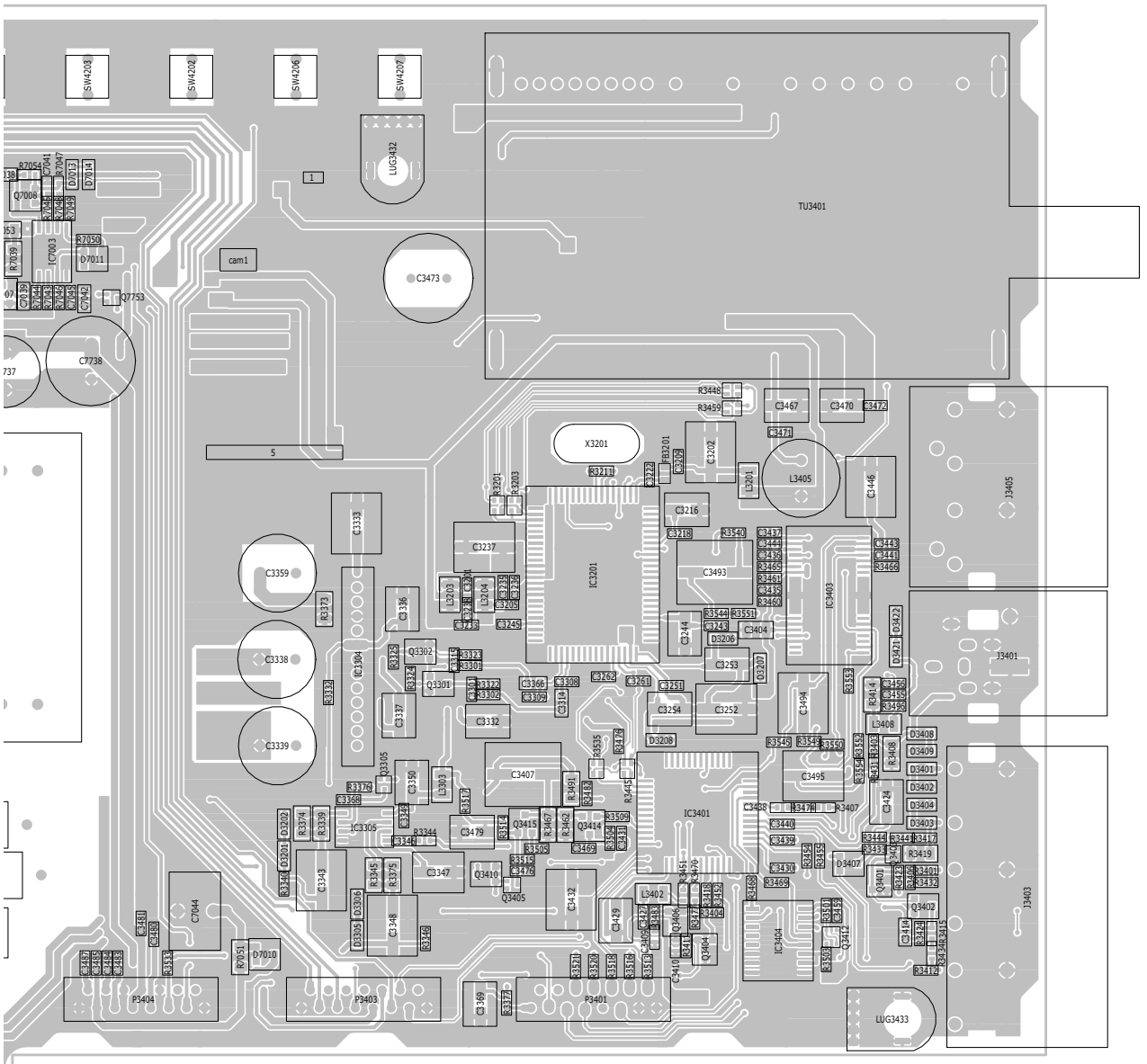

10	11	12	13	14	15	16	17	18	19

Downloaded from www.Manualslib.com manuals search engine

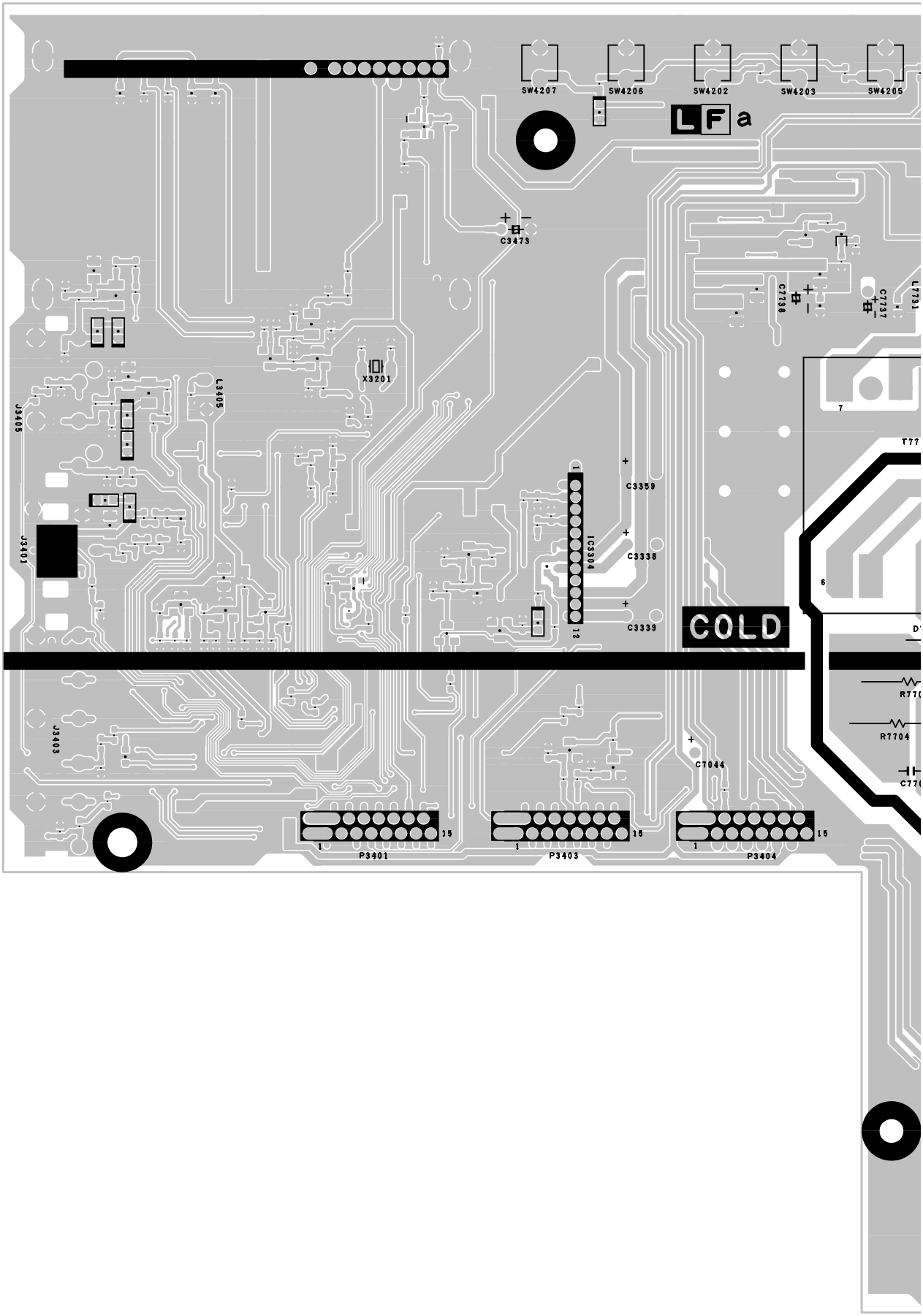

SUB Unit (Side-B)

Downloaded from www.Manualslib.com manuals search engine

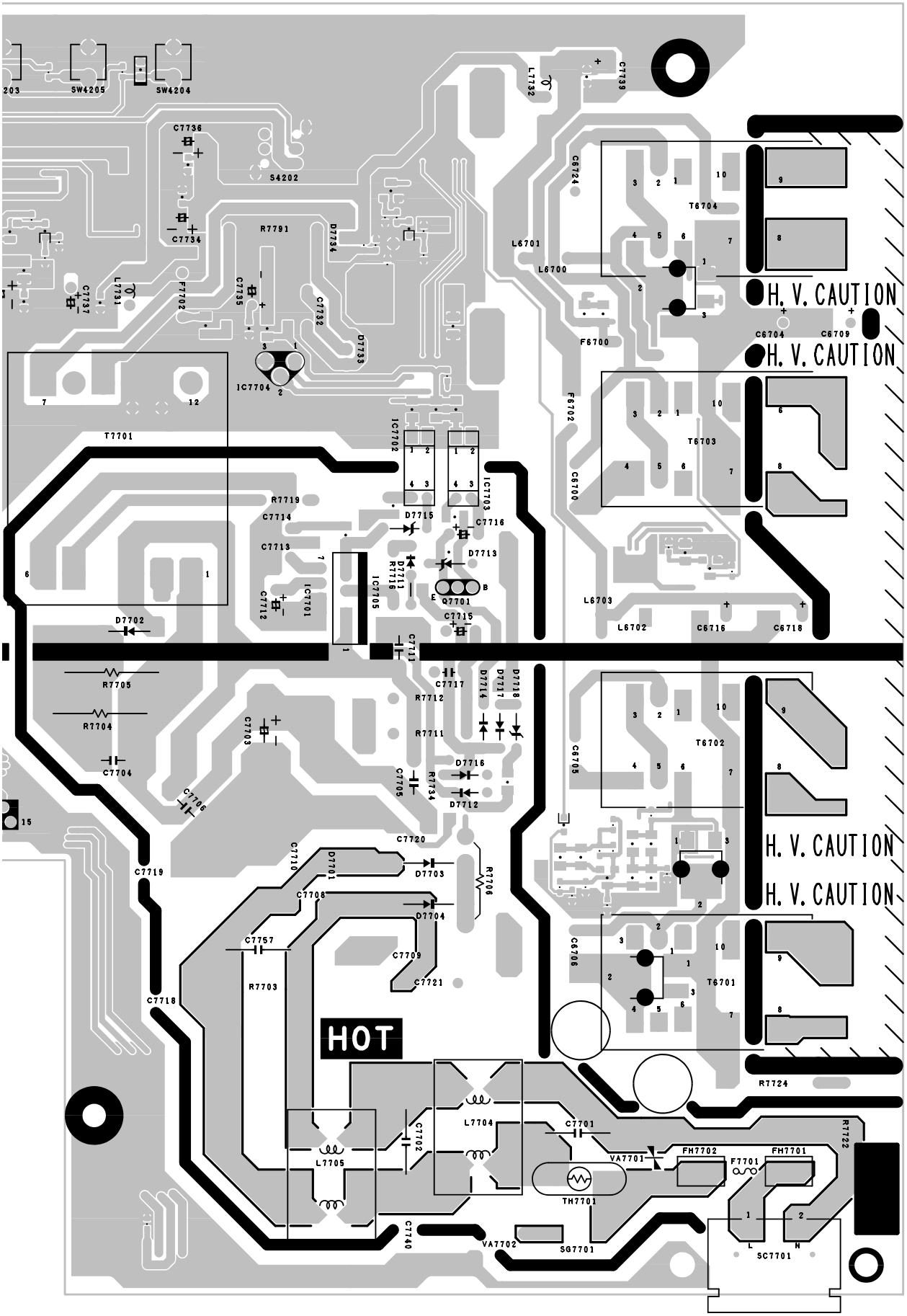

10	11	12	13	14	15	16	17	18	19

Downloaded from www.Manualslib.com manuals search engine

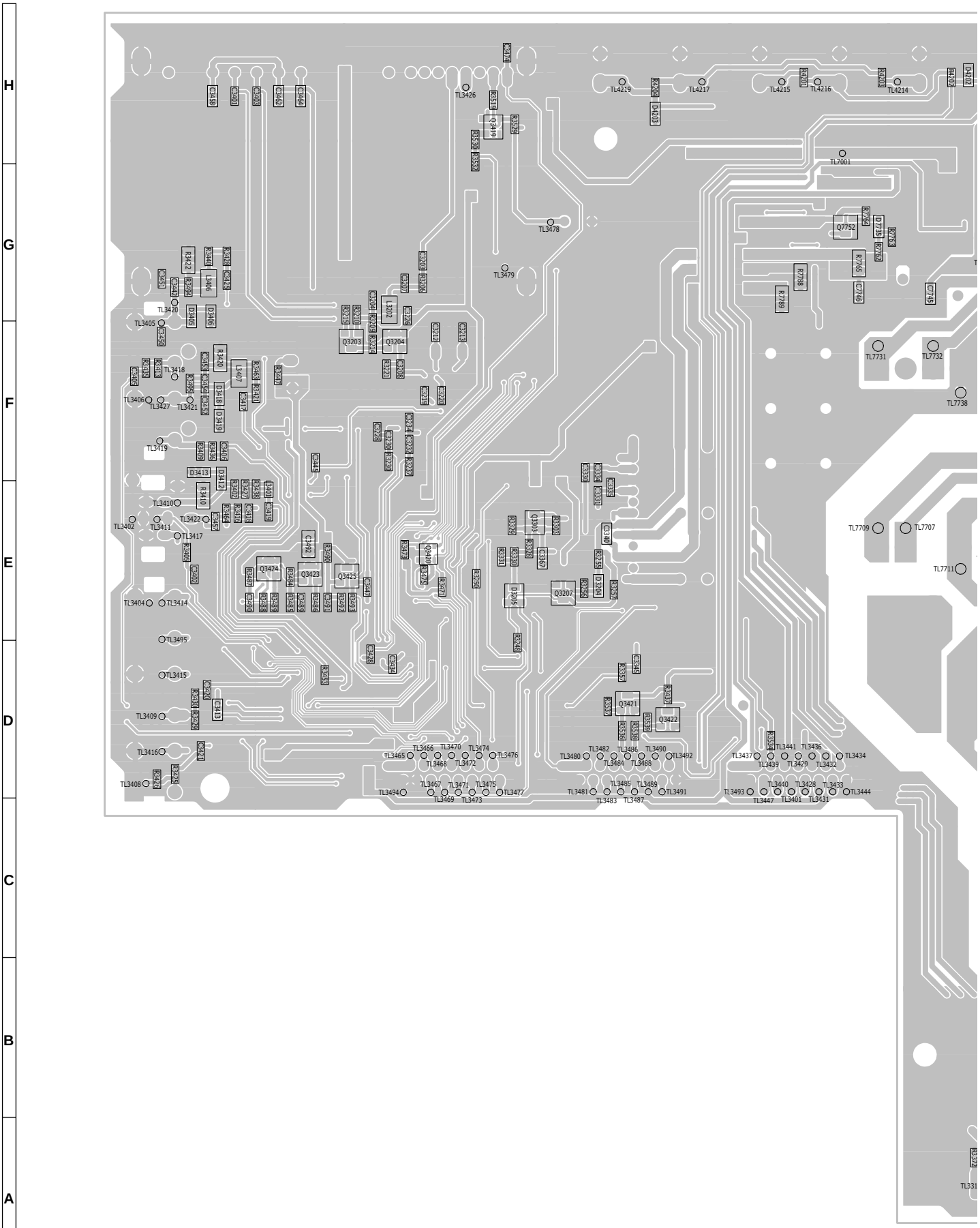

SUB Unit (Chip Parts Side-B)

Downloaded from www.Manualslib.com manuals search engine

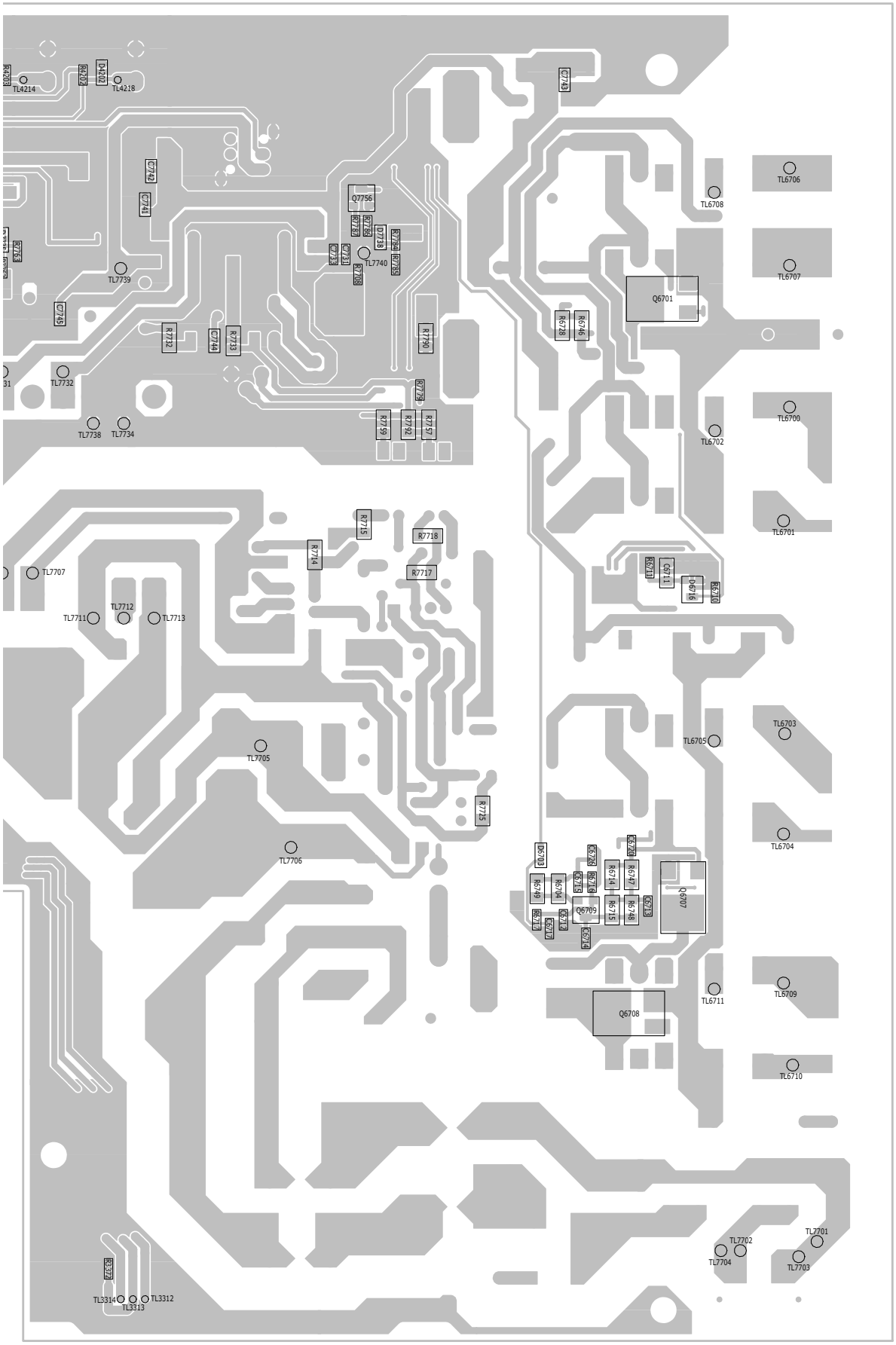

10	11	12	13	14	15	16	17	18	19

Downloaded from www.Manualslib.com manuals search engine

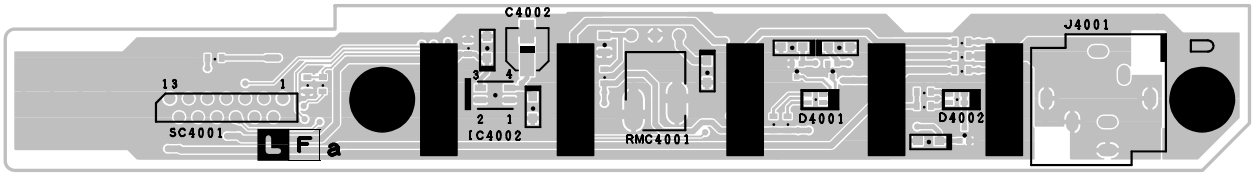

R/C, LED Unit (Component Side)
(QPWBSD040WJN2)

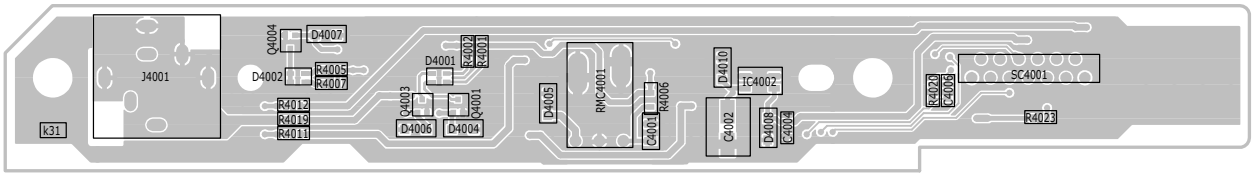

R/C, LED Unit (Chip Parts Side)
(QPWBSD040WJN2)

Downloaded from www.Manualslib.com manuals search engine

PARTS LIST

PARTS REPLACEMENT

Replacement parts which have these special safety characteristics identified in this manual ; electrical components having such features are identified by ⚠ and shaded areas in the Replacement Parts Lists and Schematic Diagrams. The use of a substitute replacement part which does no have the same safety characteristic as the factory recommended replacement parts shown in this service manual may create shock, fire or other hazards.

"HOW TO ORDER REPLACEMENT PARTS"

To have your order filled promptly and correctly, please furnish the following informations.

1. MODEL NUMBER 2. REF. NO.
3. PART NO. 4. DESCRIPTION

in **USA**: Contact your nearest SHARP Parts Distributor to order. For location of SHARP Parts Distributor, Please call Toll-Free; 1-800-BE-SHARP

★ MARK: SPARE PARTS-DELIVERY SECTION

Ref. No.	Part No.	★	Description	Code

PRINTED WIRING BOARD ASSEMBLYS
(NOT REPLACEMENT ITEM)

LC-13B8U-S

DUNTKD038FE04	–	MAIN Unit	—
DUNTKD039DE04	–	SUB Unit	—
DUNTKD040DE04	–	R/C, LED Unit	—

LC-15B8U-S

DUNTKD038FE05	–	MAIN Unit	—
DUNTKD039WE05	–	SUB Unit	—
DUNTKD040WE05	–	R/C, LED Unit	—

LC-15B9U-SM

DUNTKD038FE02	–	MAIN Unit	—
DUNTKD039WE02	–	SUB Unit	—
DUNTKD040WE02	–	R/C, LED Unit	—

LCD PANEL

NOTE: THE PARTS HERES SHOWN ARE SUPPLIED AS AN ASSEMBLY BUT NOT INDEPENDENTLY.

RLCDTA023WJN1	J	13" LCD Panel Unit (LC-13B8U-S)	CH
RLCDTA024WJN1	J	15" LCD Panel Unit (LC-15B8U-S, LC-15B9U-SM)	CN

LISTE DES PIECES

CHANGE DES PIECES

Les pi`eces de rechange qui pr élelesentent ces caract éleristiques sp éleciales de s élecurit éle, sont identifi élees dans ce manuel : les pi`eces élelectriques qui pr élesentent ces particularit éles, sont rep éler élee par la marque ⚠ et sont hachur élees dans les listes de pi`eces et dans les diagrammes sch élematiques.
La substitution d'une pi`ece de rechange par une autre qui ne pr éLesente pas les m éoemes caract éLeristiques de s élecurit éle que la pi`ece recommand élee parl'usine et dans ce manuel de service, peut provoquer une éLelectrocution, un incendie ou toutautre sinistre.

"COMMENT COMMANDER LES PIECES DE RECHANGE"

Pour que votre commande soit rapidement et correctement remplie, veuillez fournir les renseignements suivants.

1. NUMERO DU MODELE 2. NO. DE REF
3. NO. DE PIECE 4. DESCRIPTION

in **CANADA**: Contact SHARP Electronics of Canada Limited
Phone (416) 890-2100

★ MARQUE: SECTION LIVRAISON DES PIECES DERECHANGE

Ref. No.	Part No.	★	Description	Code

DUNTKD038FE04 (LC-13B8U-S)
DUNTKD038FE05 (LC-15B8U-S)
DUNTKD038FE02 (LC-15B9U-SM)
MAIN Unit

INTEGRATED CIRCUITS

IC701	RH-iXA828WJZZY	J	BD9300FV-FE2	AH
IC702	RH-iXA828WJZZY	J	BD9300FV-FE2	AH
IC703	RH-iXA828WJZZY	J	BD9300FV-FE2	AH
IC801	RH-iXB150WJZZQ	J	R8A66605A02FP	BG
IC802	VHiPQ018EH1-1Y	J	PQ018EH01ZPH	AF
IC803	VHiBA7046F/-1Y	J	BA7046F	AF
IC805	VHiPQ20WZ11-1Y	J	PQ20WZ1U	AF
IC1101	VHiBD8120FP-1Y	J	BD8120FP	AX
IC1701	VHiNJM2147M-1Y	J	NJM2147M-TE1	AF
IC2001	RH-iXA629WJN1Q	J	M30626FHPFPU5C	BC
IC2002	VHiBR24L32F-1Y	J	BR24L32F-WE2	AG
IC2003	VHiSi3010KM-1Y	J	SI-3010KM-TL	AF
IC2006	VHiPST3229N1EY	J	PST3229	AD
IC2010	VHiPST3229N1EY	J	PST3229	AD
IC2011	VHiPQ1L333M-1Y	J	PQ1L333M2SP	AD
IC8701	VHiMST9883C1EQ	J	I.C.	AW
IC8702	VHiPQ20WZ11-1Y	J	PQ20WZ1U	AF

TRANSISTORS

Q705	VSUML2N++++-1Y	J	UML2N	AC
Q706	VSUML2N++++-1Y	J	UML2N	AC
Q709	VSUML1N++++-1Y	J	UML1N	AC
Q711	VSUML2N++++-1Y	J	UML2N	AC
Q712	VSRTQ035P02-1Y	J	RTQ035P02	AD
Q713	VSRTQ035P02-1Y	J	RTQ035P02	AD
Q716	VSRHP020N06-1Y	J	RHP020N06	AD
Q801	VS2SC5384C/-1Y	J	2SC5384C	AB
Q802	VSFMMT718//-1Y	J	FMMT718	AE
Q803	VS2SC3928AR-1Y	J	2SC3928AR	AB
Q804	VS2SC3928AR-1Y	J	2SC3928AR	AB
Q805	VS2SC3928AR-1Y	J	2SC3928AR	AB
Q1101	VSFMMT718//-1Y	J	FMMT718	AE
Q1102	VSDTC144EE/-1Y	J	DTC144EE	AA
Q1103	VS2SC5566++-1Y	J	2SC5566	AD
Q1104	VS2SA2013++-1Y	J	2SA2013	AD
Q1703	VS2SA1036K/-1Y	J	2SA1036K	AC
Q1704	VS2SC3928AR-1Y	J	2SC3928AR	AB
Q1705	VSDTC144EE/-1Y	J	DTC144EE	AA
Q1706	VS2SA1037KQ-1Y	J	2SA1037KQ	AA
Q1707	VSDTC144EE/-1Y	J	DTC144EE	AA
Q1708	VS2SA1037KQ-1Y	J	2SA1037KQ	AA
Q2005	VSDTC114EE/-1Y	J	DTC114EE	AB

Downloaded from www.Manualslib.com manuals search engine

DUNTKD038FE04 (LC-13B8U-S)
DUNTKD038FE05 (LC-15B8U-S)
DUNTKD038FE02 (LC-15B9U-SM)
MAIN Unit (Continued)

Ref. No.	Part No.	★	Description	Code
Q2012	VSDTC144EE/-1Y	J	DTC144EE	AA
Q2019	VSDTC114EE/-1Y	J	DTC114EE	AB
Q2020	VS2SA1037KQ-1Y	J	2SA1037KQ	AA
Q2021	VSDTC144EE/-1Y	J	DTC144EE	AA
Q2022	VSDTA144EE/-1Y	J	DTA144EE	AA

DIODES

Ref. No.	Part No.	★	Description	Code
D701	VHDRB051L40-1Y	J	Diode	AD
D702	VHDRB051L40-1Y	J	Diode	AD
D704	VHDSFPB56//2EY	J	Diode	AC
D705	VHDRB160M30-1Y	J	Diode	AC
D706	VHDRF071M2S-1Y	J	Diode	AD
D707	VHDRB160M30-1Y	J	Diode	AC
D708	VHDRB160M40-1Y	J	Diode	AC
D709	VHD1SS355//-1Y	J	Diode	AB
D801	VHDDAN202K/-1Y	J	Diode	AB
D1101	VHDDAN202K/-1Y	J	Diode	AB
D1105	VHD1SS250//1EY	J	Diode	AB
D1701	VHDDAN202K/-1Y	J	Diode	AB
D1702	VHDDAN202K/-1Y	J	Diode	AB
D1703	VHD1SS250//1EY	J	Diode	AB
D1704	VHDRB521S30-1Y	J	Diode	AC
D1705	VHDDAN202K/-1Y	J	Diode	AB
D2001	RH-EX1271CEZZY	J	Zener Diode, 12V	AB
D2002	VHDDAN202K/-1Y	J	Diode	AB
D2007	VHDRB491D++-1Y	J	Diode	AD

PACKAGED CIRCUITS

Ref. No.	Part No.	★	Description	Code
X801	RCRSCA097WJZZY	J	Crystal, 54MHz	AG
X2001	RCRSC0032TAZZY	J	Crystal, 32.768kHz	AG

FILTER AND COILS

Ref. No.	Part No.	★	Description	Code
FL2001	RFiLZA003WJPZY	J	Filter, 16MHz	AD
L701	RCiLPA154WJZZY	J	Coil	AE
L703	RCiLPA154WJZZY	J	Coil	AE
L802	VPCNN220J2R9NY	J	Peaking 22µH	AB
L803	VPCNN220J2R9NY	J	Peaking 22µH	AB
L1701	VPCNN470J5R4NY	J	Peaking 47µH	AB
L1703	RCiLPA143WJZZY	J	Coil	AD

TRANSFORMER

Ref. No.	Part No.	★	Description	Code
T701	RTRNWA156WJZZY	J	Transformer	AG

CAPACITORS

Ref. No.	Part No.	★	Description			Code
C703	VCKYCY1EF104ZY	J	0.1	25V	Ceramic	AA
C704	VCKYCY1EB333KY	J	0.033	25V	Ceramic	AA
C706	VCKYCY1EB333KY	J	0.033	25V	Ceramic	AA
C707	VCKYCY1EB333KY	J	0.033	25V	Ceramic	AA
C710	VCKYCY1HB332KY	J	3300p	50V	Ceramic	AA
C711	VCCCCY1HH102JY	J	1000p	50V	Ceramic	AB
C714	VCCCCY1HH331JY	J	330p	50V	Ceramic	AA
C715	VCCCCY1HH330JY	J	33p	50V	Ceramic	AA
C719	VCCCCY1HH151JY	J	150p	50V	Ceramic	AA
C721	VCCCCY1HH101JY	J	100p	50V	Ceramic	AA
C722	VCCCCY1HH101JY	J	100p	50V	Ceramic	AA
C723	VCCCCY1HH181JY	J	180p	50V	Ceramic	AA
C724	VCKYTV1CB105KY	J	1	16V	Ceramic	AC
C725	VCKYCY1EB123KY	J	0.012	25V	Ceramic	AA
C727	VCKYCY1EB123KY	J	0.012	25V	Ceramic	AA
C728	RC-KZA109WJZZY	J	1	50V	Ceramic	AC
C729	RC-KZA109WJZZY	J	1	50V	Ceramic	AC
C731	VCCCCY1HH102JY	J	1000p	50V	Ceramic	AB
C733	VCCCCY1HH102JY	J	1000p	50V	Ceramic	AB
C734	VCCCCY1HH102JY	J	1000p	50V	Ceramic	AB
C735	RC-KZA101WJZZY	J	10	6.3V	Ceramic	AC
C736	RC-KZA101WJZZY	J	10	6.3V	Ceramic	AC
C738	RC-KZA108WJZZY	J	10	10V	Ceramic	AC
C739	RC-KZA108WJZZY	J	10	10V	Ceramic	AC
C741	VCKYCY1HB562KY	J	5600p	50V	Ceramic	AA
C742	VCEASX1CN106MY	J	10	16V	Electrolytic	AC
C744	RC-KZA215WJZZY	J	1	50V	Ceramic	AC
C745	RC-KZA109WJZZY	J	1	50V	Ceramic	AC
C747	RC-KZA109WJZZY	J	1	50V	Ceramic	AC
C749	RC-KZA109WJZZY	J	1	50V	Ceramic	AC
C750	RC-KZA109WJZZY	J	1	50V	Ceramic	AC
C801	VCKYCY1EB333KY	J	0.033	25V	Ceramic	AA
C802	VCKYCY1EB333KY	J	0.033	25V	Ceramic	AA
C803	VCKYCY1HB104KY	J	0.1	50V	Ceramic	AA
C804	VCKYCY1HB104KY	J	0.1	50V	Ceramic	AA
C805	VCKYCY1HB104KY	J	0.1	50V	Ceramic	AA
C806	VCKYCY1HB104KY	J	0.1	50V	Ceramic	AA
C807	VCKYCY1HB104KY	J	0.1	50V	Ceramic	AA
C808	VCKYCY1HB104KY	J	0.1	50V	Ceramic	AA
C809	VCKYCY1HB104KY	J	0.1	50V	Ceramic	AA
C810	VCKYCY1HB104KY	J	0.1	50V	Ceramic	AA
C811	VCKYCY1HB104KY	J	0.1	50V	Ceramic	AA
C812	VCKYCY1HB104KY	J	0.1	50V	Ceramic	AA
C813	VCKYCY1EB333KY	J	0.033	25V	Ceramic	AA
C814	VCKYCY1HB104KY	J	0.1	50V	Ceramic	AA
C815	VCKYCY1HB104KY	J	0.1	50V	Ceramic	AA
C816	VCKYCY1HB104KY	J	0.1	50V	Ceramic	AA
C817	VCKYCY1HB104KY	J	0.1	50V	Ceramic	AA
C818	VCKYCY1HB104KY	J	0.1	50V	Ceramic	AA
C819	VCKYCY1HB104KY	J	0.1	50V	Ceramic	AA
C820	VCKYCY1HB104KY	J	0.1	50V	Ceramic	AA
C821	VCKYCY1HB104KY	J	0.1	50V	Ceramic	AA
C822	VCKYCY1HB104KY	J	0.1	50V	Ceramic	AA
C823	VCKYCY1HB104KY	J	0.1	50V	Ceramic	AA
C824	VCKYCY1HB104KY	J	0.1	50V	Ceramic	AA
C825	VCKYCY1HB104KY	J	0.1	50V	Ceramic	AA
C826	VCKYCY1HB104KY	J	0.1	50V	Ceramic	AA
C827	VCKYCY1HB104KY	J	0.1	50V	Ceramic	AA
C828	VCKYCY1HB104KY	J	0.1	50V	Ceramic	AA
C829	VCKYCY1EB333KY	J	0.033	25V	Ceramic	AA
C830	VCKYCY1EB333KY	J	0.033	25V	Ceramic	AA
C831	VCKYCY1EB333KY	J	0.033	25V	Ceramic	AA
C832	VCKYCY1HB104KY	J	0.1	50V	Ceramic	AA
C833	VCKYCY1EB333KY	J	0.033	25V	Ceramic	AA
C834	VCKYCY1EB333KY	J	0.033	25V	Ceramic	AA
C835	VCKYCY1HB104KY	J	0.1	50V	Ceramic	AA
C836	VCKYCY1EB333KY	J	0.033	25V	Ceramic	AA
C837	VCKYCY1EB333KY	J	0.033	25V	Ceramic	AA
C838	VCKYCY1EB333KY	J	0.033	25V	Ceramic	AA
C839	VCKYCY1EB333KY	J	0.033	25V	Ceramic	AA
C840	VCKYCY1EB333KY	J	0.033	25V	Ceramic	AA
C841	VCKYCY1EB333KY	J	0.033	25V	Ceramic	AA
C842	VCKYCY1EB333KY	J	0.033	25V	Ceramic	AA
C843	VCKYCY1EB333KY	J	0.033	25V	Ceramic	AA
C844	VCKYCY1EB333KY	J	0.033	25V	Ceramic	AA
C845	VCKYCY1EB333KY	J	0.033	25V	Ceramic	AA
C846	VCKYCY1EB333KY	J	0.033	25V	Ceramic	AA
C847	VCKYCY1EB333KY	J	0.033	25V	Ceramic	AA
C848	VCKYCY1EB333KY	J	0.033	25V	Ceramic	AA
C849	VCKYCY1EB333KY	J	0.033	25V	Ceramic	AA
C850	VCKYCY1EB333KY	J	0.033	25V	Ceramic	AA
C851	VCKYCY1HB104KY	J	0.1	50V	Ceramic	AA
C852	VCKYCY1EB333KY	J	0.033	25V	Ceramic	AA
C853	VCKYCY1EB333KY	J	0.033	25V	Ceramic	AA
C854	VCKYCY1EB333KY	J	0.033	25V	Ceramic	AA
C855	VCKYCY1HB104KY	J	0.1	50V	Ceramic	AA
C856	VCKYCY1EB333KY	J	0.033	25V	Ceramic	AA
C857	VCKYCY1EB333KY	J	0.033	25V	Ceramic	AA
C858	VCKYCY1HB104KY	J	0.1	50V	Ceramic	AA
C859	VCKYCY1EB333KY	J	0.033	25V	Ceramic	AA
C860	RC-KZA101WJZZY	J	10	6.3V	Ceramic	AC
C861	RC-KZA101WJZZY	J	10	6.3V	Ceramic	AC
C862	RC-KZA101WJZZY	J	10	6.3V	Ceramic	AC
C863	VCKYCY1HB104KY	J	0.1	50V	Ceramic	AA
C864	VCKYCY1HB104KY	J	0.1	50V	Ceramic	AA
C865	VCCCCY1HH5R0CY	J	5p	50V	Ceramic	AA
C866	VCCCCY1HH6R0DY	J	6p	50V	Ceramic	AA
C867	RC-KZA101WJZZY	J	10	6.3V	Ceramic	AC
C869	VCKYCY1AB105KY	J	1	10V	Ceramic	AB
C870	VCEASX0JN227MY	J	220	6.3V	Electrolytic	AC
C872	VCAAPE0JJ227MY	J	220	6.3V	Electrolytic	AE
C874	VCKYCY1HB104KY	J	0.1	50V	Ceramic	AA

Downloaded from www.Manualslib.com manuals search engine

DUNTKD038FE04 (LC-13B8U-S)
DUNTKD038FE05 (LC-15B8U-S)
DUNTKD038FE02 (LC-15B9U-SM)
MAIN Unit (Continued)

Ref. No.	Part No.	★	Description			Code
C875	VCKYCY1HB103KY	J	0.01	50V	Ceramic	AA
C876	VCKYCY1HB102KY	J	1000p	50V	Ceramic	AA
C877	VCEASX0JN476MY	J	47	6.3V	Electrolytic	AC
C878	VCKYCY1AB105KY	J	1	10V	Ceramic	AB
C882	VCKYTV1CB105KY	J	1	16V	Ceramic	AC
C883	VCKYCY1HB102KY	J	1000p	50V	Ceramic	AA
C884	VCKYCY1EF104ZY	J	0.1	25V	Ceramic	AA
C886	VCEASY1CN477MY	J	470	16V	Electrolytic	AD
C887	VCKYCY1HB103KY	J	0.01	50V	Ceramic	AA
C888	VCCCCY1HH101JY	J	100p	50V	Ceramic	AA
C889	VCKYCY1AB105KY	J	1	10V	Ceramic	AB
C1101	RC-KZA108WJZZY	J	10	10V	Ceramic	AC
C1102	VCAAPD0JJ476MY	J	47	6.3V	Electrolytic	AE
C1103	RC-KZA101WJZZY	J	10	6.3V	Ceramic	AC
C1105	VCKYCY1EF104ZY	J	0.1	25V	Ceramic	AA
C1106	RC-KZA108WJZZY	J	10	10V	Ceramic	AC
C1107	VCCCCY1HH560JY	J	56p	50V	Ceramic	AB
C1108	RC-KZA108WJZZY	J	10	10V	Ceramic	AC
C1109	VCKYCY1EF104ZY	J	0.1	25V	Ceramic	AA
C1112	VCKYTV1CB105KY	J	1	16V	Ceramic	AC
C1113	VCKYTV1CB105KY	J	1	16V	Ceramic	AC
C1114	VCKYCY1HB104KY	J	0.1	50V	Ceramic	AA
C1702	VCKYCY1EF104ZY	J	0.1	25V	Ceramic	AA
C1703	RC-KZA108WJZZY	J	10	10V	Ceramic	AC
C1705	RC-KZA030WJZZY	J	2.2	10V	Ceramic	AB
C1706	VCKYCY1EF104ZY	J	0.1	25V	Ceramic	AA
C1707	VCKYCY1EF104ZY	J	0.1	25V	Ceramic	AA
C1708	VCKYCY1HB104KY	J	0.1	50V	Ceramic	AA
C1710	VCEASX1HN475MY	J	4.7	50V	Electrolytic	AC
C1711	VCKYCY1HB104KY	J	0.1	50V	Ceramic	AA
C1712	VCEASX1HN106MY	J	10	50V	Electrolytic	AC
C1713	VCEASY0JN227MY	J	220	6.3V	Electrolytic	AC
C1714	RC-KZA101WJZZY	J	10	6.3V	Ceramic	AC
C2001	VCKYTV1CB105KY	J	1	16V	Ceramic	AC
C2002	VCKYCY1EF104ZY	J	0.1	25V	Ceramic	AA
C2004	VCEASX0JN226MY	J	22	6.3V	Electrolytic	AB
C2005	VCKYCY1EF104ZY	J	0.1	25V	Ceramic	AA
C2006	VCEASX0JN226MY	J	22	6.3V	Electrolytic	AB
C2008	VCKYCY1EF104ZY	J	0.1	25V	Ceramic	AA
C2009	VCKYCY1EF104ZY	J	0.1	25V	Ceramic	AA
C2010	VCKYCY1HB222KY	J	2200p	50V	Ceramic	AA
C2012	VCKYCY1HB222KY	J	2200p	50V	Ceramic	AA
C2013	VCKYCY1HB102KY	J	1000p	50V	Ceramic	AA
C2014	VCKYCY1EF104ZY	J	0.1	25V	Ceramic	AA
C2015	VCKYTV1CF684ZY	J	0.68	16V	Ceramic	AB
C2016	VCCCCY1HH100DY	J	10p	50V	Ceramic	AA
C2017	VCCCCY1HH120JY	J	12p	50V	Ceramic	AA
C2018	RC-KZA101WJZZY	J	10	6.3V	Ceramic	AC
C2019	VCKYCY1EF104ZY	J	0.1	25V	Ceramic	AA
C2020	VCKYCY1HB222KY	J	2200p	50V	Ceramic	AA
C2021	VCKYCY1EF104ZY	J	0.1	25V	Ceramic	AA
C2022	VCKYCY1EF104ZY	J	0.1	25V	Ceramic	AA
C8701	VCKYCY1EF104ZY	J	0.1	25V	Ceramic	AA
C8702	RC-KZA070WJZZY	J	22	6.3V	Ceramic	AD
C8703	VCKYCY1EF104ZY	J	0.1	25V	Ceramic	AA
C8704	RC-KZA101WJZZY	J	10	6.3V	Ceramic	AC
C8705	VCKYCY1EF104ZY	J	0.1	25V	Ceramic	AA
C8706	VCKYCY1EF104ZY	J	0.1	25V	Ceramic	AA
C8707	VCKYCY1CB823KY	J	0.082	16V	Ceramic	AH
C8708	VCKYCY1EF104ZY	J	0.1	25V	Ceramic	AA
C8709	VCKYCY1HB822KY	J	8200p	50V	Ceramic	AB
C8710	RC-KZA101WJZZY	J	10	6.3V	Ceramic	AC
C8711	VCKYCY1EF104ZY	J	0.1	25V	Ceramic	AA
C8712	VCKYCY1EF104ZY	J	0.1	25V	Ceramic	AA
C8713	VCKYCY1EF104ZY	J	0.1	25V	Ceramic	AA
C8714	VCKYCY1EF104ZY	J	0.1	25V	Ceramic	AA
C8715	RC-KZA070WJZZY	J	22	6.3V	Ceramic	AD
C8716	VCKYCY1HB102KY	J	1000p	50V	Ceramic	AA
C8717	VCKYCY1CB473KY	J	0.047	16V	Ceramic	AA
C8718	VCKYCY1CB473KY	J	0.047	16V	Ceramic	AA
C8719	VCKYCY1CB473KY	J	0.047	16V	Ceramic	AA
C8720	VCKYCY1EF104ZY	J	0.1	25V	Ceramic	AA
C8722	VCKYCY1AB105KY	J	1	10V	Ceramic	AB
C8723	VCEASX0JN476MY	J	47	6.3V	Electrolytic	AC
C8724	VCCCCY1HH101JY	J	100p	50V	Ceramic	AA

RESISTORS

Ref. No.	Part No.	★	Description			Code
R703	VRS-CY1JF333JY	J	33k	1/16W	Metal Oxide	AA
R705	VRS-CY1JF333JY	J	33k	1/16W	Metal Oxide	AA
R706	VRS-CY1JF104DY	J	100k	1/16W	Metal Oxide	AA
R707	VRS-CY1JF104DY	J	100k	1/16W	Metal Oxide	AA
R708	VRS-CY1JF104DY	J	100k	1/16W	Metal Oxide	AA
R709	VRS-CY1JF104DY	J	100k	1/16W	Metal Oxide	AA
R712	VRS-CY1JF104DY	J	100k	1/16W	Metal Oxide	AA
R713	VRS-CY1JF104DY	J	100k	1/16W	Metal Oxide	AA
R714	VRS-CY1JF333JY	J	33k	1/16W	Metal Oxide	AA
R715	VRS-CY1JF223JY	J	22k	1/16W	Metal Oxide	AA
R717	VRS-CY1JF223JY	J	22k	1/16W	Metal Oxide	AA
R718	VRS-CY1JF223JY	J	22k	1/16W	Metal Oxide	AA
R719	VRS-CY1JF104JY	J	100k	1/16W	Metal Oxide	AA
R720	VRS-CY1JF223JY	J	22k	1/16W	Metal Oxide	AA
R722	VRS-CY1JF223JY	J	22k	1/16W	Metal Oxide	AA
R723	VRS-CY1JF333FY	J	33k	1/16W	Metal Oxide	AA
R725	VRS-CY1JF333FY	J	33k	1/16W	Metal Oxide	AA
R726	VRS-CY1JF203FY	J	20k	1/16W	Metal Oxide	AA
R727	VRS-CY1JF000JY	J	0	1/16W	Metal Oxide	AA
R729	VRS-CY1JF000JY	J	0	1/16W	Metal Oxide	AA
R730	VRS-CY1JF104FY	J	100k	1/16W	Metal Oxide	AA
R732	VRS-CY1JF333FY	J	33k	1/16W	Metal Oxide	AA
R733	VRS-CY1JF104FY	J	100k	1/16W	Metal Oxide	AA
R734	VRS-CY1JF562JY	J	5.6k	1/16W	Metal Oxide	AA
R739	VRS-CY1JF103JY	J	10k	1/16W	Metal Oxide	AA
R740	VRS-CY1JF103JY	J	10k	1/16W	Metal Oxide	AA
R741	VRS-CY1JF103JY	J	10k	1/16W	Metal Oxide	AA
R743	VRS-CY1JF101JY	J	100	1/16W	Metal Oxide	AA
R744	VRS-CY1JF331JY	J	330	1/16W	Metal Oxide	AA
R745	VRS-TQ2BD511JY	J	510	1/8W	Metal Oxide	AA
R746	VRS-CY1JF511JY	J	510	1/16W	Metal Oxide	AA
R747	VRS-TQ2BD511JY	J	510	1/8W	Metal Oxide	AA
R751	VRS-CY1JF511JY	J	510	1/16W	Metal Oxide	AA
R752	VRS-TQ2BD511JY	J	510	1/8W	Metal Oxide	AA
R754	VRS-CY1JF303JY	J	30k	1/16W	Metal Oxide	AA
R755	VRS-TW2HF272JY	J	2.7k	1/2W	Metal Oxide	AA
R756	VRS-TW2HF272JY	J	2.7k	1/2W	Metal Oxide	AA
R757	VRS-TW2HF000JY	J	0	1/2W	Metal Oxide	AA
R765	VRS-CY1JF105JY	J	1M	1/16W	Metal Oxide	AA
R766	VRS-CY1JF394JY	J	390k	1/16W	Metal Oxide	AA
R801	VRS-CY1JF000JY	J	0	1/16W	Metal Oxide	AA
R804	VRS-CY1JF102FY	J	1k	1/16W	Metal Oxide	AA
R805	VRS-CY1JF182FY	J	1.8k	1/16W	Metal Oxide	AA
R806	VRS-CY1JF821FY	J	820	1/16W	Metal Oxide	AA
R808	VRS-TV1JD000JY	J	0	1/10W	Metal Oxide	AA
R809	VRS-CY1JF000JY	J	0	1/16W	Metal Oxide	AA
R810	VRS-CY1JF560JY	J	56	1/16W	Metal Oxide	AA
R811	VRS-CY1JF105JY	J	1M	1/16W	Metal Oxide	AA
R812	VRS-CH1JF470JY	J	47	1/16W	Metal Oxide	AA
R813	VRS-CY1JF680JY	J	68	1/16W	Metal Oxide	AA
R814	VRS-CY1JF000JY	J	0	1/16W	Metal Oxide	AA
R815	VRS-CY1JF000JY	J	0	1/16W	Metal Oxide	AA
R816	VRS-CY1JF750JY	J	75	1/16W	Metal Oxide	AA
R819	VRS-CY1JF000JY	J	0	1/16W	Metal Oxide	AA
R823	VRS-CY1JF000JY	J	0	1/16W	Metal Oxide	AA
R827	VRS-CY1JF750JY	J	75	1/16W	Metal Oxide	AA
R831	VRS-CY1JF223JY	J	22k	1/16W	Metal Oxide	AA
R832	VRS-CY1JF103JY	J	10k	1/16W	Metal Oxide	AA
R833	VRS-CH1JF470JY	J	47	1/16W	Metal Oxide	AA
R834	VRS-CH1JF470JY	J	47	1/16W	Metal Oxide	AA
R835	VRS-CH1JF470JY	J	47	1/16W	Metal Oxide	AA
R836	VRS-CH1JF470JY	J	47	1/16W	Metal Oxide	AA
R837	VRS-CH1JF470JY	J	47	1/16W	Metal Oxide	AA
R838	VRS-CH1JF470JY	J	47	1/16W	Metal Oxide	AA
R839	VRS-CY1JF470JY	J	47	1/16W	Metal Oxide	AA
R840	VRS-CJ1JF270JY	J	27	1/16W	Metal Oxide	AA
R841	VRS-CY1JF220JY	J	22	1/16W	Metal Oxide	AA
R842	VRS-CY1JF220JY	J	22	1/16W	Metal Oxide	AA
R843	VRS-CY1JF103JY	J	10k	1/16W	Metal Oxide	AA

Downloaded from www.Manualslib.com manuals search engine

DUNTKD038FE04 (LC-13B8U-S)
DUNTKD038FE05 (LC-15B8U-S)
DUNTKD038FE02 (LC-15B9U-SM)
MAIN Unit (Continued)

Ref. No.	Part No.	★	Description			Code
R845	VRS-CY1JF220JY	J	22	1/16W	Metal Oxide	AA
R846	VRS-CY1JF220JY	J	22	1/16W	Metal Oxide	AA
R847	VRS-CY1JF220JY	J	22	1/16W	Metal Oxide	AA
R848	VRS-CY1JF000JY	J	0	1/16W	Metal Oxide	AA
R849	VRS-CY1JF000JY	J	0	1/16W	Metal Oxide	AA
R850	VRS-CY1JF000JY	J	0	1/16W	Metal Oxide	AA
R851	VRS-CY1JF000JY	J	0	1/16W	Metal Oxide	AA
R852	VRS-CY1JF000JY	J	0	1/16W	Metal Oxide	AA
R855	VRS-CY1JF102JY	J	1k	1/16W	Metal Oxide	AA
R856	VRS-CY1JF102JY	J	1k	1/16W	Metal Oxide	AA
R857	VRS-CY1JF102JY	J	1k	1/16W	Metal Oxide	AA
R858	VRS-CY1JF750JY	J	75	1/16W	Metal Oxide	AA
R860	VRS-CY1JF220JY	J	22	1/16W	Metal Oxide	AA
R861	VRS-CY1JF220JY	J	22	1/16W	Metal Oxide	AA
R862	VRS-CY1JF102JY	J	1k	1/16W	Metal Oxide	AA
R863	VRS-CY1JF102JY	J	1k	1/16W	Metal Oxide	AA
R867	VRS-CY1JF103JY	J	10k	1/16W	Metal Oxide	AA
R868	VRS-CY1JF103JY	J	10k	1/16W	Metal Oxide	AA
R869	VRS-CY1JF103JY	J	10k	1/16W	Metal Oxide	AA
R871	VRS-CY1JF000JY	J	0	1/16W	Metal Oxide	AA
R873	VRS-CH1JF103JY	J	10k	1/16W	Metal Oxide	AA
R874	VRS-CY1JF223JY	J	22k	1/16W	Metal Oxide	AA
R876	VRS-CJ1JF100JY	J	10	1/16W	Metal Oxide	AA
R878	VRS-CY1JF000JY	J	0	1/16W	Metal Oxide	AA
R879	VRS-CY1JF000JY	J	0	1/16W	Metal Oxide	AA
R882	VRS-CY1JF470JY	J	47	1/16W	Metal Oxide	AA
R883	VRS-CY1JF470JY	J	47	1/16W	Metal Oxide	AA
R884	VRS-CY1JF104JY	J	100k	1/16W	Metal Oxide	AA
R885	VRS-CY1JF333JY	J	33k	1/16W	Metal Oxide	AA
R889	VRS-CY1JF332JY	J	3.3k	1/16W	Metal Oxide	AA
R890	VRS-CY1JF562JY	J	5.6k	1/16W	Metal Oxide	AA
R891	VRS-CY1JF331JY	J	330	1/16W	Metal Oxide	AA
R892	VRS-CY1JF220JY	J	22	1/16W	Metal Oxide	AA
R893	VRS-TV1JD102JY	J	1k	1/10W	Metal Oxide	AA
R894	VRS-CY1JF473JY	J	47k	1/16W	Metal Oxide	AA
R895	VRS-CY1JF103JY	J	10k	1/16W	Metal Oxide	AA
R896	VRS-CY1JF473JY	J	47k	1/16W	Metal Oxide	AA
R1101	VRS-CY1JF103JY	J	10k	1/16W	Metal Oxide	AA
R1102	VRS-CY1JF000JY	J	0	1/16W	Metal Oxide	AA
R1104	VRS-CY1JF472FY	J	4.7k	1/16W	Metal Oxide	AA
R1105	VRS-CY1JF472FY	J	4.7k	1/16W	Metal Oxide	AA
R1106	VRS-CY1JF472JY	J	4.7k	1/16W	Metal Oxide	AA
R1107	VRS-TW2ED102JY	J	1k	1/4W	Metal Oxide	AA
R1108	VRS-TW2HF5R6JY	J	5.6	1/2W	Metal Oxide	AA
R1109	VRS-CY1JF181JY	J	180	1/16W	Metal Oxide	AA
R1110	VRS-CY1JF102JY	J	1k	1/16W	Metal Oxide	AA
R1111	VRS-CY1JF181JY	J	180	1/16W	Metal Oxide	AA
R1112	VRS-TW2HF5R6JY	J	5.6	1/2W	Metal Oxide	AA
R1113	VRS-TW2HF101JY	J	100	1/2W	Metal Oxide	AA
R1114	VRS-CY1JF103JY	J	10k	1/16W	Metal Oxide	AA
R1115	VRS-CY1JF000JY	J	0	1/16W	Metal Oxide	AA
R1117	VRS-TW2HF000JY	J	0	1/2W	Metal Oxide	AA
R1119	VRS-CY1JF000JY	J	0	1/16W	Metal Oxide	AA
R1120	VRS-CY1JF000JY	J	0	1/16W	Metal Oxide	AA
R1701	VRS-CY1JF363FY	J	36k	1/16W	Metal Oxide	AA
R1704	VRS-CY1JF101JY	J	100	1/16W	Metal Oxide	AA
R1705	VRS-CY1JF563FY	J	56k	1/16W	Metal Oxide	AA
R1706	VRS-CY1JF103JY	J	10k	1/16W	Metal Oxide	AA
R1707	VRS-CY1JF102JY	J	1k	1/16W	Metal Oxide	AA
R1709	VRS-CY1JF683FY	J	68k	1/16W	Metal Oxide	AA
R1713	VRS-CY1JF183FY	J	18k	1/16W	Metal Oxide	AA
R1714	VRS-CY1JF103JY	J	10k	1/16W	Metal Oxide	AA
R1715	VRS-TV1JD562JY	J	5.6k	1/10W	Metal Oxide	AA
R1716	VRS-TW2HF102JY	J	1k	1/2W	Metal Oxide	AA
R1717	VRS-CY1JF472JY	J	4.7k	1/16W	Metal Oxide	AA
R1718	VRS-CY1JF103JY	J	10k	1/16W	Metal Oxide	AA
R1719	VRS-TW2ED123JY	J	12k	1/4W	Metal Oxide	AA
R1720	VRS-CY1JF272JY	J	2.7k	1/16W	Metal Oxide	AA
R1722	VRS-TW2HF472JY	J	4.7k	1/2W	Metal Oxide	AA
R1723	VRS-TW2HF330JY	J	33	1/2W	Metal Oxide	AA
R1724	VRS-TW2ED561JY	J	560	1/4W	Metal Oxide	AA
R1725	VRS-CY1JF102JY	J	1k	1/16W	Metal Oxide	AA
R1726	VRS-CY1JF104JY	J	100k	1/16W	Metal Oxide	AA
R2001	VRS-CY1JF823FY	J	82k	1/16W	Metal Oxide	AA
R2002	VRS-CY1JF101JY	J	100	1/16W	Metal Oxide	AA
R2003	VRS-CY1JF223JY	J	22k	1/16W	Metal Oxide	AA
R2004	VRS-CY1JF000JY	J	0	1/16W	Metal Oxide	AA
R2005	VRS-CY1JF223JY	J	22k	1/16W	Metal Oxide	AA
R2006	VRS-CY1JF1R0JY	J	1	1/16W	Metal Oxide	AA
R2007	VRS-CY1JF103JY	J	10k	1/16W	Metal Oxide	AA
R2008	VRS-CY1JF102FY	J	1k	1/16W	Metal Oxide	AA
R2009	VRS-CY1JF102JY	J	1k	1/16W	Metal Oxide	AA
R2010	VRS-CY1JF623FY	J	62k	1/16W	Metal Oxide	AA
R2011	VRS-CY1JF433FY	J	43k	1/16W	Metal Oxide	AA
R2012	VRS-CY1JF103FY	J	10k	1/16W	Metal Oxide	AA
R2013	VRS-CY1JF101JY	J	100	1/16W	Metal Oxide	AA
R2015	VRS-CY1JF101JY	J	100	1/16W	Metal Oxide	AA
R2016	VRS-CY1JF473FY	J	47k	1/16W	Metal Oxide	AA
R2017	VRS-CJ1JF223JY	J	22k	1/16W	Metal Oxide	AA
R2018	VRS-CJ1JF102JY	J	1k	1/16W	Metal Oxide	AA
R2019	VRS-CY1JF823FY	J	82k	1/16W	Metal Oxide	AA
R2020	VRS-CY1JF154FY	J	150k	1/16W	Metal Oxide	AA
R2021	VRS-CY1JF274JY	J	270k	1/16W	Metal Oxide	AA
R2023	VRS-CY1JF184JY	J	180k	1/16W	Metal Oxide	AA
R2024	VRS-CY1JF823JY	J	82k	1/16W	Metal Oxide	AA
R2026	VRS-CY1JF103JY	J	10k	1/16W	Metal Oxide	AA
			(LC-15B8U-S, LC-15B9U-SM)			
R2028	VRS-CY1JF154FY	J	150k	1/16W	Metal Oxide	AA
R2029	VRS-CY1JF473JY	J	47k	1/16W	Metal Oxide	AA
R2030	VRS-CJ1JF223JY	J	22k	1/16W	Metal Oxide	AA
R2031	VRS-CY1JF103JY	J	10k	1/16W	Metal Oxide	AA
R2032	VRS-CY1JF103JY	J	10k	1/16W	Metal Oxide	AA
			(LC-13B8U-S)			
R2034	VRS-CY1JF153JY	J	15k	1/16W	Metal Oxide	AA
R2035	VRS-CY1JF223JY	J	22k	1/16W	Metal Oxide	AA
R2036	VRS-CY1JF101JY	J	100	1/16W	Metal Oxide	AA
R2037	VRS-CY1JF102JY	J	1k	1/16W	Metal Oxide	AA
R2038	VRS-CJ1JF101JY	J	100	1/16W	Metal Oxide	AA
R2039	VRS-CY1JF103JY	J	10k	1/16W	Metal Oxide	AA
R2040	VRS-CY1JF101JY	J	100	1/16W	Metal Oxide	AA
R2041	VRS-CY1JF512JY	J	5.1k	1/16W	Metal Oxide	AA
R2043	VRS-CY1JF472JY	J	4.7k	1/16W	Metal Oxide	AA
R2044	VRS-CJ1JF101JY	J	100	1/16W	Metal Oxide	AA
R2045	VRS-CY1JF000JY	J	0	1/16W	Metal Oxide	AA
R2046	VRS-CY1JF680JY	J	68	1/16W	Metal Oxide	AA
R2047	VRS-CY1JF103JY	J	10k	1/16W	Metal Oxide	AA
R2048	VRS-CY1JF101JY	J	100	1/16W	Metal Oxide	AA
R2050	VRS-CY1JF101JY	J	100	1/16W	Metal Oxide	AA
R2051	VRS-CY1JF101JY	J	100	1/16W	Metal Oxide	AA
R2052	VRS-CY1JF101JY	J	100	1/16W	Metal Oxide	AA
R2053	VRS-CY1JF101JY	J	100	1/16W	Metal Oxide	AA
R2054	VRS-CY1JF101JY	J	100	1/16W	Metal Oxide	AA
R2055	VRS-CY1JF101JY	J	100	1/16W	Metal Oxide	AA
R2056	VRS-CJ1JF101JY	J	100	1/16W	Metal Oxide	AA
R2058	VRS-CJ1JF682JY	J	6.8k	1/16W	Metal Oxide	AA
R2059	VRS-CY1JF104JY	J	100k	1/16W	Metal Oxide	AA
R2060	VRS-CY1JF101JY	J	100	1/16W	Metal Oxide	AA
R2063	VRS-CY1JF101JY	J	100	1/16W	Metal Oxide	AA
R2064	VRS-CY1JF101JY	J	100	1/16W	Metal Oxide	AA
R2065	VRS-CY1JF101JY	J	100	1/16W	Metal Oxide	AA
R2066	VRS-CY1JF101JY	J	100	1/16W	Metal Oxide	AA
R2068	VRS-CY1JF101JY	J	100	1/16W	Metal Oxide	AA
R2069	VRS-CY1JF223JY	J	22k	1/16W	Metal Oxide	AA
R2070	VRS-CJ1JF101JY	J	100	1/16W	Metal Oxide	AA
R2071	VRS-CJ1JF153JY	J	15k	1/16W	Metal Oxide	AA
R2072	VRS-CH1JF680JY	J	68	1/16W	Metal Oxide	AA
R2073	VRS-CH1JF101JY	J	100	1/16W	Metal Oxide	AA
R2074	VRS-CJ1JF101JY	J	100	1/16W	Metal Oxide	AA
R2081	VRS-CY1JF101JY	J	100	1/16W	Metal Oxide	AA
R2082	VRS-CJ1JF101JY	J	100	1/16W	Metal Oxide	AA
R2085	VRS-CY1JF000JY	J	0	1/16W	Metal Oxide	AA
R2086	VRS-CY1JF103JY	J	10k	1/16W	Metal Oxide	AA
R2087	VRS-CY1JF000JY	J	0	1/16W	Metal Oxide	AA
R2088	VRS-CY1JF101JY	J	100	1/16W	Metal Oxide	AA
R2089	VRS-CY1JF000JY	J	0	1/16W	Metal Oxide	AA
R2092	VRS-CY1JF000JY	J	0	1/16W	Metal Oxide	AA

Downloaded from www.Manualslib.com manuals search engine

DUNTKD038FE04 (LC-13B8U-S)
DUNTKD038FE05 (LC-15B8U-S)
DUNTKD038FE02 (LC-15B9U-SM)
MAIN Unit (Continued)

Ref. No.	Part No.	★	Description			Code
R2098	VRS-CY1JF000JY	J	0	1/16W	Metal Oxide	AA
R2099	VRS-CY1JF000JY	J	0	1/16W	Metal Oxide	AA
R2100	VRS-CY1JF000JY	J	0	1/16W	Metal Oxide	AA
R2102	VRS-CY1JF103JY	J	10k	1/16W	Metal Oxide	AA
R2103	VRS-CY1JF101JY	J	100	1/16W	Metal Oxide	AA
R2105	VRS-CY1JF000JY	J	0	1/16W	Metal Oxide	AA
R2106	VRS-CY1JF000JY	J	0	1/16W	Metal Oxide	AA
R8701	VRS-CY1JF000JY	J	0	1/16W	Metal Oxide	AA
R8702	VRS-TQ2BD272JY	J	2.7k	1/8W	Metal Oxide	AB
R8703	VRS-CY1JF000JY	J	0	1/16W	Metal Oxide	AA
R8704	VRS-CY1JF151JY	J	150	1/16W	Metal Oxide	AA
R8705	VRS-CY1JF151JY	J	150	1/16W	Metal Oxide	AA
R8706	VRS-CJ1JF220JY	J	22	1/16W	Metal Oxide	AA
R8707	VRS-CY1JF220JY	J	22	1/16W	Metal Oxide	AA
R8718	VRS-CH1JF330JY	J	33	1/16W	Metal Oxide	AA
R8719	VRS-CH1JF330JY	J	33	1/16W	Metal Oxide	AA
R8720	VRS-CH1JF330JY	J	33	1/16W	Metal Oxide	AA
R8721	VRS-CH1JF330JY	J	33	1/16W	Metal Oxide	AA
R8722	VRS-CH1JF330JY	J	33	1/16W	Metal Oxide	AA
R8723	VRS-CH1JF330JY	J	33	1/16W	Metal Oxide	AA
R8725	VRS-CY1JF102FY	J	1k	1/16W	Metal Oxide	AA
R8726	VRS-CY1JF821FY	J	820	1/16W	Metal Oxide	AA
R8727	VRS-CY1JF182FY	J	1.8k	1/16W	Metal Oxide	AA
R8728	VRS-CY1JF000JY	J	0	1/16W	Metal Oxide	AA
R8729	VRS-CY1JF271JY	J	270	1/16W	Metal Oxide	AA

MISCELLANEOUS PARTS

FB702	RBLN-0253TAZZY	J	Ferrite Bead	AA
FB704	RBLN-0209TAZZY	J	Ferrite Bead	AB
FB705	RBLN-0253TAZZY	J	Ferrite Bead	AA
FB706	RBLN-0051TAZZY	J	Ferrite Bead	AC
FB707	RBLN-0253TAZZY	J	Ferrite Bead	AA
FB708	RBLN-0253TAZZY	J	Ferrite Bead	AA
FB709	RBLN-0051TAZZY	J	Ferrite Bead	AC
FB710	RBLN-0253TAZZY	J	Ferrite Bead	AA
FB711	RBLN-0253TAZZY	J	Ferrite Bead	AA
FB801	RBLN-0083GEZZY	J	Ferrite Bead	AB
FB803	RBLN-0006TAZZY	J	Ferrite Bead	AB
FB805	RBLN-0006TAZZY	J	Ferrite Bead	AB
FB806	RBLN-0006TAZZY	J	Ferrite Bead	AB
FB807	RBLN-0210TAZZY	J	Ferrite Bead	AB
FB8701	RBLN-0050TAZZY	J	Ferrite Bead	AA
FB8702	RBLN-0050TAZZY	J	Ferrite Bead	AA
FB8703	RBLN-0050TAZZY	J	Ferrite Bead	AA
FB8704	RBLN-0067TAZZY	J	Ferrite Bead	AC
P2001	QCNCWA502WJPZY	J	Connector, 13-pin	AD
P2002	QPLGNA144WJZZY	J	Plug, 20-pin	AF
SC801	QSOCNA476WJZZY	J	Socket, 50-pin	AE
SC802	QSOCNA473WJZZY	J	Socket, 30-pin	AE
SC803	QSOCNA472WJZZY	J	Socket, 20-pin	AD
SC2001	QCNCWA010WJZZY	J	Connector, 15-pin	AE
SC2002	QCNCWA010WJZZY	J	Connector, 15-pin	AE
SC2003	QCNCWA010WJZZY	J	Connector, 15-pin	AE
LUG2001	QLUGHA006WJZZY	J	Lug	AC
LUG2002	QLUGHA006WJZZY	J	Lug	AC
LUG2003	QLUGHA006WJZZY	J	Lug	AC

DUNTKD039DE04 (LC-13B8U-S)
DUNTKD039WE05 (LC-15B8U-S)
DUNTKD039WE02 (LC-15B9U-SM)
SUB Unit

TUNER

NOTE: THE PARTS HERES SHOWN ARE SUPPLIED AS AN ASSEMBLY BUT NOT INDEPENDENTLY.

	TU3401	VTUVT2U5UF559	J	Tuner	BB

INTEGRATED CIRCUITS

	IC3201	RH-iXB302WJN1Q	J	MSP3445G-QA-S1	AT
	IC3304	VHiLA4635A+-1S	J	LA4635A	AM
	IC3305	VHiBH3544F+-1Y	J	BH3544F-E2	AE
	IC3401	VHiCXA2089Q-1S	J	CXA2089Q (LC-13B8U-S)	AN
	IC3401	VHiCXA2089Q-2Y	X	CXA2089Q-6T (LC-15B8U-S, LC-15B9U-SM)	AN
	IC3403	VHiSM5301AS-1Y	J	SM5301AS-G-ET	AR
	IC3404	VHiTC4053BF1EY	J	TC4053Bf	AF
	IC7004	VHiSi3012LU-1Y	J	SI-3012LU	AE
⚠	IC7702	RH-FXA003WJZZ	J	PC123Y82	AD
⚠	IC7703	RH-FXA003WJZZ	J	PC123Y82	AD
	IC7704	VHiSE012N//-1	J	SE012N	AH
	IC7705	VHiSTRW67652E	J	STR-W6765N	AL

TRANSISTORS

	Q3203	VS2SC3928AR-1Y	J	2SC3928AR	AB
	Q3204	VS2SC3928AR-1Y	J	2SC3928AR	AB
	Q3207	VS2SC3928AR-1Y	J	2SC3928AR	AB
	Q3301	VSDTC314TK/-1Y	J	DTC314TK	AC
	Q3302	VSDTC314TK/-1Y	J	DTC314TK	AC
	Q3305	VSDTC144EE/-1Y	J	DTC144EE	AA
	Q3401	VSDTC314TK/-1Y	J	DTC314TK	AC
	Q3402	VSDTC314TK/-1Y	J	DTC314TK	AC
	Q3403	VSDTA144EE/-1Y	J	DTA144EE	AA
	Q3404	VS2SA1037KQ-1Y	J	2SA1037KQ	AA
	Q3406	VS2SA1037KQ-1Y	J	2SA1037KQ	AA
	Q3410	VSDTC314TK/-1Y	J	DTC314TK	AC
	Q3412	VSUMG4N++++-1Y	J	UMG4N	AB
	Q3414	VS2SC3928AR-1Y	J	2SC3928AR	AB
	Q3419	VSiMZ1A///-1Y	J	IMZ1A	AC
	Q3420	VSUPA606T//-1Y	J	UPA606T	AD
	Q3421	VS2SC3928AR-1Y	J	2SC3928AR	AB
	Q6700	VS2SC5886A+-1Y	J	2SC5886A	AD
	Q6701	VS2SC5886A+-1Y	J	2SC5886A	AD
	Q6702	VS2SA1530AR-1Y	J	2SA1530AR	AB
	Q6706	VSUPA606T//-1Y	J	UPA606T	AD
	Q6707	VS2SC5886A+-1Y	J	2SC5886A	AD
	Q6708	VS2SC5886A+-1Y	J	2SC5886A	AD
	Q6709	VS2SA1530AR-1Y	J	2SA1530AR	AB
	Q6713	VSUPA606T//-1Y	J	UPA606T	AD
	Q7701	VS2SA1013//1E+	J	2SA1013	AD
	Q7751	VSDTC144EE/-1Y	J	DTC144EE	AA
	Q7752	VS2SA1530AR-1Y	J	2SA1530AR	AB
	Q7753	VSDTC144EE/-1Y	J	DTC144EE	AA
	Q7756	VS2SA1530AR-1Y	J	2SA1530AR	AB
	Q7757	VSDTC144EE/-1Y	J	DTC144EE	AA

DIODES

	D3201	RH-EX1271CEZZY	J	Zener Diode, 12V	AB
	D3202	RH-EX1271CEZZY	J	Zener Diode, 12V	AB
	D3204	RH-EX1397CEZZY	J	Zener Diode, 7.5V	AB
	D3205	VHDDAN202K/-1Y	J	Diode	AB
	D3206	RH-EX1271CEZZY	J	Zener Diode, 12V	AB
	D3207	RH-EX1271CEZZY	J	Zener Diode, 12V	AB
	D3208	RH-EX1271CEZZY	J	Zener Diode, 12V	AB
	D3305	RH-EX1271CEZZY	J	Zener Diode, 12V	AB
	D3306	RH-EX1271CEZZY	J	Zener Diode, 12V	AB
	D3405	RH-EX1271CEZZY	J	Zener Diode, 12V	AB
	D3406	RH-EX1271CEZZY	J	Zener Diode, 12V	AB
	D3407	VHDDAN202K/-1Y	J	Diode	AB
	D3408	RH-EX1271CEZZY	J	Zener Diode, 12V	AB
	D3409	RH-EX1271CEZZY	J	Zener Diode, 12V	AB
	D3412	RH-EX1271CEZZY	J	Zener Diode, 12V	AB
	D3413	RH-EX1271CEZZY	J	Zener Diode, 12V	AB
	D3418	RH-EX1271CEZZY	J	Zener Diode, 12V	AB

Downloaded from www.Manualslib.com manuals search engine

DUNTKD039DE04 (LC-13B8U-S)
DUNTKD039WE05 (LC-15B8U-S)
DUNTKD039WE02 (LC-15B9U-SM)
SUB Unit (Continued)

Ref. No.	Part No.	★	Description	Code
D3419	RH-EX1271CEZZY	J	Zener Diode, 12V	AB
D3421	RH-EX1271CEZZY	J	Zener Diode, 12V	AB
D3422	RH-EX1271CEZZY	J	Zener Diode, 12V	AB
D4201	RH-EX1283CEZZY	J	Zener Diode, 18V	AB
D4202	RH-EX1271CEZZY	J	Zener Diode, 12V	AB
D4203	RH-EX1271CEZZY	J	Zener Diode, 12V	AB
D6701	VHDBAS316//-1Y	J	Diode	AB
D6703	VHDBAS316//-1Y	J	Diode	AB
D6705	VHDDAN202K/-1Y	J	Diode	AB
D6707	VHD1PS184++-1Y	J	Diode	AB
D6710	VHDMA157A//-1Y	J	Diode	AC
D6712	VHDMA157A//-1Y	J	Diode	AC
D6715	VHDMA157A//-1Y	J	Diode	AC
D6716	VHDMA157A//-1Y	J	Diode	AC
D7010	VHDRB491D++-1Y	J	Diode	AD
D7013	RH-EXA095WJZZY	J	Zener Diode, 16V	AB
D7014	RH-EXA095WJZZY	J	Zener Diode, 16V	AB
⚠ D7701	RH-DX0476CEZZ	J	Diode	AG
D7702	RH-DX0321CEZZY	J	Diode	AC
D7703	RH-DX0490CEZZY	J	Diode	AC
D7704	RH-DX0490CEZZY	J	Diode	AC
D7711	RH-DX0066GEZZY	J	Diode	AC
D7712	VHD1SS244//-1Y	J	Diode	AB
D7713	RH-EX0640GEZZY	J	Zener Diode, 12V	AA
D7714	VHD1SS244//-1Y	J	Diode	AB
D7715	RH-EX0618GEZZY	J	Zener Diode, 6.2V	AB
D7716	VHD1SS244//-1Y	J	Diode	AB
D7717	VHD1SS244//-1Y	J	Diode	AB
D7718	RH-EX0656GEZZY	J	Zener Diode, 20V	AB
D7733	VHDSF30SC6+-1	J	Diode	AH
D7734	VHDSF30SC6+-1	J	Diode	AH
D7735	VHDBAS316//-1Y	J	Diode	AB
D7738	VHDBAS316//-1Y	J	Diode	AB
TH7701	RH-HXA019WJZZ	J	Thermistor	AE
⚠ VA7701	RH-VXA022WJZZ	J	Varistor	AD
⚠ VA7702	RH-VXA018WJN1	J	Varistor	AD

PACKAGED CIRCUITS

X3201	RCRSB0250GEZZ+	J	Crystal, 18.432MHz	AG

COILS

L3201	VPCNN101J7R7NY	J	Peaking 100µH	AB
L3202	VPCNN220J2R9NY	J	Peaking 22µH	AB
L3203	VPCNN4R7J1R2NY	J	Peaking 4.7µH	AB
L3303	VPCNN101J7R7NY	J	Peaking 100µH	AB
L3401	VP-9N4R7KR56NY	J	Peaking 4.7µH	AC
L3405	RCiLPA142WJZZ	J	Coil	AD
L6700	RCiLPA371WJZZ+	J	Coil	AC
L6702	RCiLPA371WJZZ+	J	Coil	AC
⚠ L7704	RCiLFA167WJZZ	J	Coil	AE
⚠ L7705	RCiLFA173WJZZ	J	Coil	AG
L7731	RCiLPA476WJZZ+	J	Coil	AC
L7732	RCiLP0184CEZZ+	J	Coil	AD

TRANSFORMERS

⚠ T6701	RTRNZA085WJZZ	J	Transformer	AL
⚠ T6702	RTRNZA085WJZZ	J	Transformer	AL
⚠ T6703	RTRNZA085WJZZ	J	Transformer	AL
⚠ T6704	RTRNZA085WJZZ	J	Transformer	AL
⚠ T7701	RTRNWA173WJZZ	J	Transformer	AQ

CAPACITORS

C3202	VCEASX0JN107MY	J	100	6.3V	Electrolytic	AC
C3203	VCKYCY1HB102KY	J	1000p	50V	Ceramic	AA
C3204	VCCCCY1HH330JY	J	33p	50V	Ceramic	AA
C3207	VCCCCY1HH330JY	J	33p	50V	Ceramic	AA
C3208	VCCCCY1HH560JY	J	56p	50V	Ceramic	AB
C3209	VCKYCY1AB105KY	J	1	10V	Ceramic	AB
C3212	VCCCCY1HH5R0CY	J	5p	50V	Ceramic	AA
C3213	VCCCCY1HH7R0DY	J	7p	50V	Ceramic	AA
C3216	VCEASX1CN106MY	J	10	16V	Electrolytic	AC
C3218	VCKYCY1EF104ZY	J	0.1	25V	Ceramic	AA
C3219	VCCCCY1HH560JY	J	56p	50V	Ceramic	AB
C3220	VCCCCY1HH560JY	J	56p	50V	Ceramic	AB
C3222	VCKYCY1EF104ZY	J	0.1	25V	Ceramic	AA
C3226	VCKYCY1EF104ZY	J	0.1	25V	Ceramic	AA
C3230	VCKYCY1AB105KY	J	1	10V	Ceramic	AB
C3232	VCKYCY1AB105KY	J	1	10V	Ceramic	AB
C3235	VCKYCY1EF104ZY	J	0.1	25V	Ceramic	AA
C3236	VCKYCY1AB105KY	J	1	10V	Ceramic	AB
C3237	VCEASX0JN107MY	J	100	6.3V	Electrolytic	AC
C3243	VCKYCY1EF104ZY	J	0.1	25V	Ceramic	AA
C3244	VCEASX1HN335MY	J	3.3	50V	Electrolytic	AB
C3245	VCKYCY1HB102KY	J	1000p	50V	Ceramic	AA
C3251	VCKYCY1EF104ZY	J	0.1	25V	Ceramic	AA
C3252	VCEASX1CN107MY	J	100	16V	Electrolytic	AC
C3253	VCEASX1CN106MY	J	10	16V	Electrolytic	AC
C3254	VCEASX1CN106MY	J	10	16V	Electrolytic	AC
C3261	VCKYCY1EB223KY	J	0.022	25V	Ceramic	AA
C3262	VCKYCY1EB223KY	J	0.022	25V	Ceramic	AA
C3308	VCKYCY1HB222KY	J	2200p	50V	Ceramic	AA
C3309	VCKYCY1HB222KY	J	2200p	50V	Ceramic	AA
C3314	RC-KZA030WJZZY	J	2.2	10V	Ceramic	AB
C3330	VCKYCY1AB105KY	J	1	10V	Ceramic	AB
C3331	VCKYCY1AB105KY	J	1	10V	Ceramic	AB
C3333	VCEASY1CN227MY	J	220	16V	Electrolytic	AC
C3334	VCKYCY1HB102KY	J	1000p	50V	Ceramic	AA
C3335	VCKYCY1HB102KY	J	1000p	50V	Ceramic	AA
C3336	VCEASX1CN106MY	J	10	16V	Electrolytic	AC
C3337	VCEASX1CN106MY	J	10	16V	Electrolytic	AC
C3338	RC-EZA216WJZZ	J	1000	16V	Electrolytic	AD
C3339	RC-EZA216WJZZ	J	1000	16V	Electrolytic	AD
C3340	VCKYTV1CB105KY	J	1	16V	Ceramic	AC
C3343	VCEASX0JN227MY	J	220	6.3V	Electrolytic	AC
C3345	VCKYCY1AB105KY	J	1	10V	Ceramic	AB
C3346	VCKYCY1AB105KY	J	1	10V	Ceramic	AB
C3347	VCEASX1AN336MY	J	33	10V	Electrolytic	AC
C3348	VCEASX0JN227MY	J	220	6.3V	Electrolytic	AC
C3349	VCKYCY1EF104ZY	J	0.1	25V	Ceramic	AA
C3350	VCEASX1CN106MY	J	10	16V	Electrolytic	AC
C3359	RC-EZA216WJZZ	J	1000	16V	Electrolytic	AD
C3366	RC-KZA030WJZZY	J	2.2	10V	Ceramic	AB
C3367	RC-KZA030WJZZY	J	2.2	10V	Ceramic	AB
C3368	VCKYCY1AB105KY	J	1	10V	Ceramic	AB
C3369	VCEASX1CN106MY	J	10	16V	Electrolytic	AC
C3402	VCKYCY1EF104ZY	J	0.1	25V	Ceramic	AA
C3404	RC-KZA108WJZZY	J	10	10V	Ceramic	AC
C3405	VCKYCY1AB105KY	J	1	10V	Ceramic	AB
C3406	VCKYCY1AB105KY	J	1	10V	Ceramic	AB
C3407	VCEASY1CN477MY	J	470	16V	Electrolytic	AD
C3409	VCKYCY1EF104ZY	J	0.1	25V	Ceramic	AA
C3410	VCKYCY1EF104ZY	J	0.1	25V	Ceramic	AA
C3413	RC-KZA030WJZZY	J	2.2	10V	Ceramic	AB
C3414	RC-KZA030WJZZY	J	2.2	10V	Ceramic	AB
C3417	VCKYCY1AB105KY	J	1	10V	Ceramic	AB
C3418	VCKYCY1AB105KY	J	1	10V	Ceramic	AB
C3419	VCCCCY1HH221JY	J	220p	50V	Ceramic	AA
C3420	VCKYCY1AB105KY	J	1	10V	Ceramic	AB
C3421	VCKYCY1AB105KY	J	1	10V	Ceramic	AB
C3424	VCEASX1CN106MY	J	10	16V	Electrolytic	AC
C3425	VCKYCY1AB105KY	J	1	10V	Ceramic	AB
C3428	VCKYCY1AB105KY	J	1	10V	Ceramic	AB
C3429	VCEASX1CN106MY	J	10	16V	Electrolytic	AC
C3430	VCKYCY1AB105KY	J	1	10V	Ceramic	AB
C3431	VCKYCY1EF104ZY	J	0.1	25V	Ceramic	AA
C3432	VCEASX1CN107MY	J	100	16V	Electrolytic	AC
C3434	VCKYCY1AB105KY	J	1	10V	Ceramic	AB
C3435	VCKYCY1EF104ZY	J	0.1	25V	Ceramic	AA
C3436	VCKYCY1EF104ZY	J	0.1	25V	Ceramic	AA
C3437	VCKYCY1EF104ZY	J	0.1	25V	Ceramic	AA
C3438	VCKYCY1AB105KY	J	1	10V	Ceramic	AB
C3439	VCKYCY1AB105KY	J	1	10V	Ceramic	AB
C3440	VCKYCY1CB104KY	J	0.1	16V	Ceramic	AB
C3441	VCKYCY1EF104ZY	J	0.1	25V	Ceramic	AA
C3443	VCKYCY1EF104ZY	J	0.1	25V	Ceramic	AA

Downloaded from www.Manualslib.com manuals search engine

DUNTKD039DE04 (LC-13B8U-S)
DUNTKD039WE05 (LC-15B8U-S)
DUNTKD039WE02 (LC-15B9U-SM)
SUB Unit (Continued)

Ref. No.	Part No.	★	Description			Code
C3444	VCKYCY1EF104ZY	J	0.1	25V	Ceramic	AA
C3445	VCKYCY1EF104ZY	J	0.1	25V	Ceramic	AA
C3446	VCEASX0JN107MY	J	100	6.3V	Electrolytic	AC
C3447	RC-KZA116WJZZY	J	4.7	6.3V	Ceramic	AC
C3458	RC-KZA101WJZZY	J	10	6.3V	Ceramic	AC
C3459	VCKYCY1EF104ZY	J	0.1	25V	Ceramic	AA
C3462	RC-KZA101WJZZY	J	10	6.3V	Ceramic	AC
C3464	RC-KZA101WJZZY	J	10	6.3V	Ceramic	AC
C3467	VCAAPC0JJ226MY	J	22	6.3V	Electrolytic	AE
C3469	VCKYCY1EF104ZY	J	0.1	25V	Ceramic	AA
C3470	VCEASX1HN105MY	J	1	50V	Electrolytic	AB
C3471	VCKYCY1EF104ZY	J	0.1	25V	Ceramic	AA
C3472	VCKYCY1HF103ZY	J	0.01	50V	Ceramic	AA
C3473	VCESYA0JM338M	J	3300	6.3V	Electrolytic	AD
C6700	RC-FZA110WJZZ	J	0.15	250V	Film	AE
			(LC-13B8U-S)			
C6700	RC-FZA112WJZZ	X	0.17	250V	Film	AD
			(LC-15B8U-S, LC-15B9U-SM)			
C6703	VCKYCY1EB104KY	J	0.1	25V	Ceramic	AB
C6704	RC-EZA482WJZZ	J	1000	25V	Electrolytic	AD
C6705	RC-FZA110WJZZ	J	0.15	250V	Film	AE
			(LC-13B8U-S)			
C6705	RC-FZA112WJZZ	X	0.17	250V	Film	AD
			(LC-15B8U-S, LC-15B9U-SM)			
C6709	RC-EZA482WJZZ	J	1000	25V	Electrolytic	AD
C6710	RC-KZ0072TAZZY	J	1	25V	Ceramic	AC
C6711	RC-KZ0072TAZZY	J	1	25V	Ceramic	AC
C6715	VCKYCY1EB104KY	J	0.1	25V	Ceramic	AB
C6716	RC-EZA482WJZZ	J	1000	25V	Electrolytic	AD
C6718	RC-EZA482WJZZ	J	1000	25V	Electrolytic	AD
C6719	VCKYCY1CB333KY	J	0.033	16V	Ceramic	AA
C6720	VCKYCY1CB333KY	J	0.033	16V	Ceramic	AA
C6722	RC-KZ0072TAZZY	J	1	25V	Ceramic	AC
C6723	RC-KZ0072TAZZY	J	1	25V	Ceramic	AC
C6725	VCKYCY1EB104KY	J	0.1	25V	Ceramic	AB
C6726	VCKYCY1EB104KY	J	0.1	25V	Ceramic	AB
C7040	VCEASX1CN476MY	J	47	16V	Electrolytic	AC
C7043	RC-KZA111WJZZY	J	1	25V	Ceramic	AC
C7044	RC-EZA559WJZZ	J	0.33F	5.5V	Electrolytic	AF
⚠ C7701	RC-FZA022WJZZ	J	0.22	275V	Film	AD
⚠ C7702	RC-FZA022WJZZ	J	0.22	275V	Film	AD
⚠ C7703	RC-EZA732WJQZ	J	220	420V	Electrolytic	AP
C7704	RC-FZA180WJZZ	J	0.1	580V	Ceramic	AD
C7710	RC-KZ0103GEZZ	J	1000p	250V	Ceramic	AD
C7711	RC-KZA271WJZZ	J	470p	2kV	Ceramic	AC
C7712	VCESYA1HM225M+	J	2.2	50V	Electrolytic	AB
C7713	VCKYPA1HB471K+	J	470p	50V	Ceramic	AA
C7714	VCQYTA1HM104J+	J	0.1	50V	Mylar	AB
C7715	VCESYA1HM106M+	J	10	50V	Electrolytic	AB
C7716	VCESYA1VM476M+	J	47	35V	Electrolytic	AB
C7717	VCQYTA1HM332J+	J	3300p	50V	Mylar	AA
C7721	RC-KZ0103GEZZ	J	1000p	250V	Ceramic	AD
C7734	RC-EZA484WJZZ	J	1500	25V	Electrolytic	AE
C7735	RC-EZA468WJZZ	J	2200	16V	Electrolytic	AE
C7737	RC-EZA162WJZZ+	J	1000	16V	Electrolytic	AD
C7738	RC-EZA182WJZZ	J	1000	35V	Electrolytic	AE
C7739	RC-EZA476WJZZ+	J	330	25V	Electrolytic	AC
⚠ C7740	RC-KZ0105GEZZ	J	2200	250V	Ceramic	AD
C7751	VCKYCY1HB104KY	J	0.1	50V	Ceramic	AA

RESISTORS

Ref. No.	Part No.	★	Description			Code
R3201	VRS-CJ1JF101JY	J	100	1/16W	Metal Oxide	AA
R3206	VRS-CY1JF102JY	J	1k	1/16W	Metal Oxide	AA
R3209	VRS-CY1JF153JY	J	15k	1/16W	Metal Oxide	AA
R3210	VRS-CY1JF332JY	J	3.3k	1/16W	Metal Oxide	AA
R3211	VRS-CY1JF105JY	J	1M	1/16W	Metal Oxide	AA
R3214	VRS-CY1JF152JY	J	1.5k	1/16W	Metal Oxide	AA
R3215	VRS-CY1JF331JY	J	330	1/16W	Metal Oxide	AA
R3221	VRS-CY1JF102JY	J	1k	1/16W	Metal Oxide	AA
R3248	VRS-CY1JF000JY	J	0	1/16W	Metal Oxide	AA
R3250	VRS-CY1JF101JY	J	100	1/16W	Metal Oxide	AA
R3255	VRS-CY1JF822JY	J	8.2k	1/16W	Metal Oxide	AA
R3256	VRS-CY1JF103JY	J	10k	1/16W	Metal Oxide	AA
R3257	VRS-CY1JF183JY	J	18k	1/16W	Metal Oxide	AA
R3303	VRS-CY1JF000JY	J	0	1/16W	Metal Oxide	AA
R3322	VRS-CY1JF472JY	J	4.7k	1/16W	Metal Oxide	AA
R3323	VRS-CY1JF472JY	J	4.7k	1/16W	Metal Oxide	AA
R3324	VRS-CY1JF332JY	J	3.3k	1/16W	Metal Oxide	AA
R3325	VRS-CY1JF332JY	J	3.3k	1/16W	Metal Oxide	AA
R3330	VRS-CY1JF000JY	J	0	1/16W	Metal Oxide	AA
R3332	VRS-CY1JF122JY	J	1.2k	1/16W	Metal Oxide	AA
R3339	VRS-TQ2BD330JY	J	33	1/8W	Metal Oxide	AA
R3340	VRS-CY1JF392JY	J	3.9k	1/16W	Metal Oxide	AA
R3344	VRS-CY1JF471JY	J	470	1/16W	Metal Oxide	AA
R3345	VRS-TQ2BD330JY	J	33	1/8W	Metal Oxide	AA
R3346	VRS-CY1JF392JY	J	3.9k	1/16W	Metal Oxide	AA
R3357	VRS-CY1JF471JY	J	470	1/16W	Metal Oxide	AA
R3374	VRS-TQ2BD470JY	J	47	1/8W	Metal Oxide	AA
R3375	VRS-TQ2BD470JY	J	47	1/8W	Metal Oxide	AA
R3376	VRS-CY1JF104JY	J	100k	1/16W	Metal Oxide	AA
R3377	VRS-CY1JF123JY	J	12k	1/16W	Metal Oxide	AA
R3401	VRS-CY1JF104JY	J	100k	1/16W	Metal Oxide	AA
R3402	VRS-CY1JF000JY	J	0	1/16W	Metal Oxide	AA
R3403	VRS-CY1JF000JY	J	0	1/16W	Metal Oxide	AA
R3404	VRS-CY1JF222JY	J	2.2k	1/16W	Metal Oxide	AA
R3405	VRS-CY1JF101JY	J	100	1/16W	Metal Oxide	AA
R3406	VRS-CY1JF101JY	J	100	1/16W	Metal Oxide	AA
R3407	VRS-CY1JF000JY	J	0	1/16W	Metal Oxide	AA
R3408	VRS-TQ2BD750JY	J	75	1/8W	Metal Oxide	AA
R3409	VRS-CY1JF104JY	J	100k	1/16W	Metal Oxide	AA
R3410	VRS-TQ2BD750JY	J	75	1/8W	Metal Oxide	AA
R3411	VRS-CY1JF152JY	J	1.5k	1/16W	Metal Oxide	AA
R3412	VRS-CY1JF104JY	J	100k	1/16W	Metal Oxide	AA
R3413	VRS-CY1JF104JY	J	100k	1/16W	Metal Oxide	AA
R3414	VRS-TQ2BD750JY	J	75	1/8W	Metal Oxide	AA
R3415	VRS-CY1JF101JY	J	100	1/16W	Metal Oxide	AA
R3416	VRS-CY1JF101JY	J	100	1/16W	Metal Oxide	AA
R3417	VRS-CY1JF000JY	J	0	1/16W	Metal Oxide	AA
R3418	VRS-CY1JF222JY	J	2.2k	1/16W	Metal Oxide	AA
R3419	VRS-TQ2BD750JY	J	75	1/8W	Metal Oxide	AA
R3420	VRS-TQ2BD750JY	J	75	1/8W	Metal Oxide	AA
R3421	VRS-CY1JF101JY	J	100	1/16W	Metal Oxide	AA
R3422	VRS-TQ2BD750JY	J	75	1/8W	Metal Oxide	AA
R3423	VRS-CY1JF471JY	J	470	1/16W	Metal Oxide	AA
R3424	VRS-CY1JF471JY	J	470	1/16W	Metal Oxide	AA
R3425	VRS-CY1JF000JY	J	0	1/16W	Metal Oxide	AA
R3426	VRS-CY1JF104JY	J	100k	1/16W	Metal Oxide	AA
R3427	VRS-CY1JF101JY	J	100	1/16W	Metal Oxide	AA
R3428	VRS-CY1JF101JY	J	100	1/16W	Metal Oxide	AA
R3429	VRS-CY1JF104JY	J	100k	1/16W	Metal Oxide	AA
R3430	VRS-CY1JF000JY	J	0	1/16W	Metal Oxide	AA
R3431	VRS-CY1JF101JY	J	100	1/16W	Metal Oxide	AA
R3432	VRS-CY1JF000JY	J	0	1/16W	Metal Oxide	AA
R3433	VRS-CY1JF562JY	J	5.6k	1/16W	Metal Oxide	AA
R3434	VRS-CY1JF000JY	J	0	1/16W	Metal Oxide	AA
R3435	VRS-CY1JF000JY	J	0	1/16W	Metal Oxide	AA
R3436	VRS-CY1JF000JY	J	0	1/16W	Metal Oxide	AA
R3437	VRS-CY1JF000JY	J	0	1/16W	Metal Oxide	AA
R3440	VRS-CY1JF000JY	J	0	1/16W	Metal Oxide	AA
R3441	VRS-CY1JF101JY	J	100	1/16W	Metal Oxide	AA
R3444	VRS-CY1JF153JY	J	15k	1/16W	Metal Oxide	AA
R3448	VRS-CJ1JF331JY	J	330	1/16W	Metal Oxide	AA
R3452	VRS-CY1JF562JY	J	5.6k	1/16W	Metal Oxide	AA
R3453	VRS-CY1JF562JY	J	5.6k	1/16W	Metal Oxide	AA
R3454	VRS-CY1JF562JY	J	5.6k	1/16W	Metal Oxide	AA
R3455	VRS-CY1JF562JY	J	5.6k	1/16W	Metal Oxide	AA
R3462	VRS-TQ2BD471JY	J	470	1/8W	Metal Oxide	AA
R3463	VRS-CY1JF000JY	J	0	1/16W	Metal Oxide	AA
R3464	VRS-CY1JF000JY	J	0	1/16W	Metal Oxide	AA
R3465	VRS-CY1JF122FY	J	1.2k	1/16W	Metal Oxide	AA
R3466	VRS-CY1JF103JY	J	10k	1/16W	Metal Oxide	AA
R3467	VRS-TQ2BD471JY	J	470	1/8W	Metal Oxide	AA
R3468	VRS-CY1JF472JY	J	4.7k	1/16W	Metal Oxide	AA
R3469	VRS-CY1JF472JY	J	4.7k	1/16W	Metal Oxide	AA
R3470	VRS-CY1JF222JY	J	2.2k	1/16W	Metal Oxide	AA
R3471	VRS-CY1JF103JY	J	10k	1/16W	Metal Oxide	AA

Downloaded from www.Manualslib.com manuals search engine

DUNTKD039DE04 (LC-13B8U-S)
DUNTKD039WE05 (LC-15B8U-S)
DUNTKD039WE02 (LC-15B9U-SM)
SUB Unit (Continued)

Ref. No.	Part No.	★	Description			Code
R3473	VRS-CY1JF103JY	J	10k	1/16W	Metal Oxide	AA
R3474	VRS-CY1JF101JY	J	100	1/16W	Metal Oxide	AA
R3475	VRS-CY1JF472JY	J	4.7k	1/16W	Metal Oxide	AA
R3476	VRS-CY1JF472JY	J	4.7k	1/16W	Metal Oxide	AA
R3477	VRS-CY1JF222JY	J	2.2k	1/16W	Metal Oxide	AA
R3482	VRS-CY1JF104JY	J	100k	1/16W	Metal Oxide	AA
R3483	VRS-CY1JF152JY	J	1.5k	1/16W	Metal Oxide	AA
R3491	VRS-TQ2BD750JY	J	75	1/8W	Metal Oxide	AA
R3494	VRS-CY1JF000JY	J	0	1/16W	Metal Oxide	AA
R3495	VRS-CY1JF000JY	J	0	1/16W	Metal Oxide	AA
R3496	VRS-CY1JF000JY	J	0	1/16W	Metal Oxide	AA
R3501	VRS-CY1JF103JY	J	10k	1/16W	Metal Oxide	AA
R3503	VRS-CY1JF103JY	J	10k	1/16W	Metal Oxide	AA
R3504	VRS-CY1JF100JY	J	10	1/16W	Metal Oxide	AA
R3509	VRS-CY1JF101JY	J	100	1/16W	Metal Oxide	AA
R3513	VRS-CY1JF000JY	J	0	1/16W	Metal Oxide	AA
R3516	VRS-CY1JF000JY	J	0	1/16W	Metal Oxide	AA
R3518	VRS-CY1JF000JY	J	0	1/16W	Metal Oxide	AA
R3519	VRS-CY1JF102JY	J	1k	1/16W	Metal Oxide	AA
R3520	VRS-CY1JF000JY	J	0	1/16W	Metal Oxide	AA
R3521	VRS-CY1JF000JY	J	0	1/16W	Metal Oxide	AA
R3529	VRS-CY1JF152JY	J	1.5k	1/16W	Metal Oxide	AA
R3530	VRS-CY1JF561FY	J	560	1/16W	Metal Oxide	AA
R3532	VRS-CY1JF102FY	J	1k	1/16W	Metal Oxide	AA
R3533	VRS-CY1JF000JY	J	0	1/16W	Metal Oxide	AA
R3534	VRS-CY1JF000JY	J	0	1/16W	Metal Oxide	AA
R3535	VRS-CJ1JF101JY	J	100	1/16W	Metal Oxide	AA
R3536	VRS-CY1JF223JY	J	22k	1/16W	Metal Oxide	AA
R3537	VRS-CY1JF103JY	J	10k	1/16W	Metal Oxide	AA
R3540	VRS-CY1JF000JY	J	0	1/16W	Metal Oxide	AA
R3545	VRS-CY1JF000JY	J	0	1/16W	Metal Oxide	AA
R3550	VRS-CY1JF000JY	J	0	1/16W	Metal Oxide	AA
R4201	VRS-CY1JF682JY	J	6.8k	1/16W	Metal Oxide	AA
R4202	VRS-CY1JF472JY	J	4.7k	1/16W	Metal Oxide	AA
R4203	VRS-CY1JF682JY	J	6.8k	1/16W	Metal Oxide	AA
R4204	VRS-CY1JF472JY	J	4.7k	1/16W	Metal Oxide	AA
R6701	VRS-TQ2BD182JY	J	1.8k	1/8W	Metal Oxide	AA
R6702	VRS-CY1JF562JY	J	5.6k	1/16W	Metal Oxide	AA
R6703	VRS-CY1JF333JY	J	33k	1/16W	Metal Oxide	AA
R6704	VRS-TQ2BD681JY	J	680	1/8W	Metal Oxide	AA
R6705	VRS-TQ2BD182JY	J	1.8k	1/8W	Metal Oxide	AA
R6708	VRS-CY1JF471JY	J	470	1/16W	Metal Oxide	AA
R6709	VRS-CY1JF824JY	J	820k	1/16W	Metal Oxide	AA
R6710	VRS-CY1JF471JY	J	470	1/16W	Metal Oxide	AA
R6711	VRS-CY1JF824JY	J	820k	1/16W	Metal Oxide	AA
R6712	VRS-CY1JF562JY	J	5.6k	1/16W	Metal Oxide	AA
R6713	VRS-CY1JF562JY	J	5.6k	1/16W	Metal Oxide	AA
R6714	VRS-TQ2BD182JY	J	1.8k	1/8W	Metal Oxide	AA
R6715	VRS-TQ2BD182JY	J	1.8k	1/8W	Metal Oxide	AA
R6716	VRS-CY1JF562JY	J	5.6k	1/16W	Metal Oxide	AA
R6717	VRS-CY1JF333JY	J	33k	1/16W	Metal Oxide	AA
R6722	VRS-CY1JF471JY	J	470	1/16W	Metal Oxide	AA
R6723	VRS-CY1JF824JY	J	820k	1/16W	Metal Oxide	AA
R6724	VRS-CY1JF471JY	J	470	1/16W	Metal Oxide	AA
R6725	VRS-CY1JF824JY	J	820k	1/16W	Metal Oxide	AA
R6726	VRS-CY1JF562JY	J	5.6k	1/16W	Metal Oxide	AA
R6727	VRS-CY1JF562JY	J	5.6k	1/16W	Metal Oxide	AA
R6728	VRS-TQ2BD681JY	J	680	1/8W	Metal Oxide	AA
R6739	VRS-CY1JF000JY	J	0	1/16W	Metal Oxide	AA
R6741	VRS-CY1JF000JY	J	0	1/16W	Metal Oxide	AA
R6743	VRS-CY1JF563JY	J	56k	1/16W	Metal Oxide	AA
R6744	VRS-TQ2BD182JY	J	1.8k	1/8W	Metal Oxide	AA
R6745	VRS-TQ2BD182JY	J	1.8k	1/8W	Metal Oxide	AA
R6746	VRS-TQ2BD681JY	J	680	1/8W	Metal Oxide	AA
R6747	VRS-TQ2BD182JY	J	1.8k	1/8W	Metal Oxide	AA
R6748	VRS-TQ2BD182JY	J	1.8k	1/8W	Metal Oxide	AA
R6749	VRS-TQ2BD681JY	J	680	1/8W	Metal Oxide	AA
R7040	VRS-CY1JF682FY	J	6.8k	1/16W	Metal Oxide	AA
R7041	VRS-CY1JF132FY	J	1.3k	1/16W	Metal Oxide	AA
R7042	VRS-CY1JF152FY	J	1.5k	1/16W	Metal Oxide	AA
R7051	VRS-TQ2BD101JY	J	100	1/8W	Metal Oxide	AA
R7052	VRS-CY1JF102JY	J	1k	1/16W	Metal Oxide	AA
R7053	VRS-TQ2BD1R0JY	J	1	1/8W	Metal Oxide	AA
R7054	VRS-CY1JF102JY	J	1k	1/16W	Metal Oxide	AA
⚠ R7703	VRD-RA2EE105J	J	1M	1/4W	Carbon	AA
R7704	RR-DZA033WJZZ	J	180k	3W	Special Carbon Film	AD
R7705	RR-DZA033WJZZ	J	180k	3W	Special Carbon Film	AD
R7706	RR-DZA036WJZZ	J	150k	2W	Special Carbon Film	AC
R7711	VRN-VV3ABR68J	J	0.68	1W	Metal Film	AA
R7712	VRN-VV3ABR68J	J	0.68	1W	Metal Film	AA
R7714	VRS-TQ2BD102JY	J	1k	1/8W	Metal Oxide	AA
R7715	VRS-TQ2BD102JY	J	1k	1/8W	Metal Oxide	AA
R7716	VRD-RA2HD220JY	J	22 (LC-13B8U-S)	1/2W	Carbon	AA
R7716	VRD-RM2HD220JY	J	22 (LC-15B8U-S, LC-15B9U-SM)	1/2W	Carbon	AA
R7717	VRS-TQ2BD102JY	J	1k	1/8W	Metal Oxide	AA
R7718	VRS-TQ2BD562JY	J	5.6k	1/8W	Metal Oxide	AA
R7719	VRD-RA2HD220JY	J	22 (LC-13B8U-S)	1/2W	Carbon	AA
R7719	VRD-RM2HD220JY	J	22 (LC-15B8U-S, LC-15B9U-SM)	1/2W	Carbon	AA
R7720	VRS-TQ2BD222JY	J	2.2k	1/8W	Metal Oxide	AA
R7721	VRS-TQ2BD222JY	J	2.2k	1/8W	Metal Oxide	AA
⚠ R7722	RR-HZ0048CEZZ	J	3.9M	1/2W	Coat-insulated fixed anti-surge	AB
⚠ R7724	RR-HZ0048CEZZ	J	3.9M	1/2W	Coat-insulated fixed anti-surge	AB
R7725	VRS-TQ2BD153JY	J	15k	1/8W	Metal Oxide	AA
R7732	VRS-TQ2BD000JY	J	0	1/8W	Metal Oxide	AA
R7734	VRS-SV2HC101J	J	100	1/2W	Metal Oxide	AA
R7752	VRS-CY1JF102JY	J	1k	1/16W	Metal Oxide	AA
R7754	VRS-TQ2BD000JY	J	0	1/8W	Metal Oxide	AA
R7755	VRS-CY1JF103JY	J	10k	1/16W	Metal Oxide	AA
R7757	VRS-TQ2BD222JY	J	2.2k	1/8W	Metal Oxide	AA
R7758	VRS-TQ2BD000JY	J	0	1/8W	Metal Oxide	AA
R7759	VRS-TQ2BD102JY	J	1k	1/8W	Metal Oxide	AA
R7761	VRS-TQ2BD000JY	J	0	1/8W	Metal Oxide	AA
R7762	VRS-CY1JF823JY	J	82k	1/16W	Metal Oxide	AA
R7763	VRS-CY1JF273JY	J	27k	1/16W	Metal Oxide	AA
R7764	VRS-CY1JF563JY	J	56k	1/16W	Metal Oxide	AA
R7765	VRS-TQ2BD000JY	J	0	1/8W	Metal Oxide	AA
R7766	VRS-TQ2BD000JY	J	0	1/8W	Metal Oxide	AA
R7781	VRS-CY1JF000JY	J	0	1/16W	Metal Oxide	AA
R7783	VRS-TQ2BD153JY	J	15k	1/8W	Metal Oxide	AA
R7784	VRS-CY1JF223JY	J	22k	1/16W	Metal Oxide	AA
R7785	VRS-CY1JF563JY	J	56k	1/16W	Metal Oxide	AA
R7786	VRS-CY1JF182JY	J	1.8k	1/16W	Metal Oxide	AA
R7787	VRS-CY1JF563JY	J	56k	1/16W	Metal Oxide	AA
R7788	VRS-TQ2BD000JY	J	0	1/8W	Metal Oxide	AA
R7789	VRS-TQ2BD000JY	J	0	1/8W	Metal Oxide	AA
R7790	VRS-TQ2BD000JY	J	0	1/8W	Metal Oxide	AA
R7791	VRN-VV3DBR10J	J	0.1	2W	Metal Film	AB
R7792	VRS-TQ2BD222JY	J	2.2k	1/8W	Metal Oxide	AA

SWITCHES

S4202	QSW-PA011WJZZ	J	MAIN POWER	AF
SW4202	QSW-K0003AJZZ+	J	CH(Channel)(∨)	AB
SW4203	QSW-K0003AJZZ+	J	CH(Channel)(∧)	AB
SW4204	QSW-K0003AJZZ+	J	INPUT	AB
SW4205	QSW-K0003AJZZ+	J	MENU	AB
SW4206	QSW-K0003AJZZ+	J	VOL(Volume)(+)	AB
SW4207	QSW-K0003AJZZ+	J	VOL(Volume)(–)	AB

MISCELLANEOUS PARTS

⚠ F6700	QFS-ZA003WJZZ	J	Fuse, T1.6AL/250V	AD
⚠ F6702	QFS-ZA003WJZZ	J	Fuse, T1.6AL/250V	AD
⚠ F7701	QFS-D0010CEZZ	J	Fuse, T3.15AL/250V	AE
⚠ F7702	QFS-ZA006WJZZ	J	Fuse, T3.15AL/250V	AB
FH7701	QFSHD1013CEZZ+	J	Fuse Holder	AC
FH7702	QFSHD1014CEZZ+	J	Fuse Holder	AC
FB3201	RBLN-0035TAZZY	J	Ferrite Bead	AB
J3401	QTANZA025WJZZ	J	S-VIDEO/PR Terminal	AF
J3403	QJAKLA015WJZZ	J	AUDIO(L/R)/VIDEO Terminal	AE
J3405	QJAKHA016WJZZ	J	INPUT1 Terminal	AE

Downloaded from www.Manualslib.com manuals search engine

DUNTKD039DE04 (LC-13B8U-S)
DUNTKD039WE05 (LC-15B8U-S)
DUNTKD039WE02 (LC-15B9U-SM)
SUB Unit (Continued)

Ref. No.	Part No.	★	Description	Code
P3302	QPLGN0541FJZZY	J	Plug, 4-pin (LC-15B8U-S, LC-15B9U-SM)	AD
P3303	QPLGN0176FJZZY	J	Plug, 4-pin (LC-13B8U-S)	AD
P3401	QCNCMA012WJZZ	J	Connector, 15-pin	AD
P3403	QCNCMA012WJZZ	J	Connector, 15-pin	AD
P3404	QCNCMA012WJZZ	J	Connector, 15-pin	AD
P6700	QPLGNA237WJZZY	J	Plug, 2-pin	AC
P6701	QPLGNA237WJZZY	J	Plug, 2-pin	AC
P6702	QPLGNA237WJZZY	J	Plug, 2-pin	AC
P6703	QPLGNA237WJZZY	J	Plug, 2-pin	AC
⚠ SC7701	QSOCAA010WJZZ	J	AC INPUT Socket	AD
LUG3431	QLUGHA006WJZZY	J	Lug	AC
LUG3432	QLUGHA006WJZZY	J	Lug	AC
LUG3433	QLUGHA006WJZZY	J	Lug	AC
LUG3434	QLUGHA006WJZZY	J	Lug	AC
RDA7701	PRDARA219WJFW	J	Heat Sink	AL
RDA7732	PRDARA220WJFW	J	Heat Sink	AL
SG7701	QSPGCA003WJZZ	J	Spark Gap	AH
	LANGTA199WJFW	J	Fixing Metal	AD
	LCHSMA202WJN1	J	Chassis Frame (LC-13B8U-S)	AM
	LCHSMA203WJKA	X	Chassis Frame (LC-15B8U-S, LC-15B9U-SM)	AN
	LX-BZ3266CEFH	J	Screw, x2	AB
	XBPS730P10JS0	J	Screw, x4	AA
	XEBS930P08000	J	Screw, x3	AA

DUNTKD040DE04 (LC-13B8U-S)
DUNTKD040WE05 (LC-15B8U-S)
DUNTKD040WE02 (LC-15B9U-SM)
R/C, LED Unit

INTEGRATED CIRCUITS

Ref. No.	Part No.	★	Description	Code
IC4002	VHiMM1616++-1Y	J	MM1616XBRE	AF

TRANSISTORS

Ref. No.	Part No.	★	Description	Code
Q4001	VSDTC114EE/-1Y	J	DTC114EE	AB
Q4003	VSDTC114EE/-1Y	J	DTC114EE	AB
Q4004	VSDTC114EE/-1Y	J	DTC114EE	AB

DIODES

Ref. No.	Part No.	★	Description	Code
D4001	RH-PX0421CEZZY	J	POWER/WAKE UP TIMER Indicator	AD
D4002	RH-PX0421CEZZY	J	OPC Indicator	AD
D4006	RH-EX1271CEZZY	J	Zener Diode, 12V	AB
D4007	RH-EX1271CEZZY	J	Zener Diode, 12V	AB
D4008	RH-EX1244CEZZY	J	Zener Diode, 5.1V	AB

CAPACITORS

Ref. No.	Part No.	★	Description			Code
C4001	RC-KZ0117TAZZY	J	4.7	6.3V	Ceramic	AD
C4002	VCEASX1CN106MY	J	10	16V	Electrolytic	AC
C4004	VCKYCY1HB103KY	J	0.01	50V	Ceramic	AA
C4006	VCCCCY1HH221JY	J	220p	50V	Ceramic	AA

RESISTORS

Ref. No.	Part No.	★	Description			Code
R4001	VRS-CY1JF331JY	J	330	1/16W	Metal Oxide	AA
R4002	VRS-CY1JF182JY	J	1.8k	1/16W	Metal Oxide	AA
R4006	VRS-CY1JF101JY	J	100	1/16W	Metal Oxide	AA
R4007	VRS-CY1JF331JY	J	330	1/16W	Metal Oxide	AA
R4011	VRS-CY1JF000JY	J	0	1/16W	Metal Oxide	AA
R4012	VRS-CY1JF000JY	J	0	1/16W	Metal Oxide	AA
R4019	VRS-CY1JF000JY	J	0	1/16W	Metal Oxide	AA
R4020	VRS-CY1JF000JY	J	0	1/16W	Metal Oxide	AA
R4023	VRS-CY1JF000JY	J	0	1/16W	Metal Oxide	AA

MISCELLANEOUS PARTS

Ref. No.	Part No.	★	Description	Code
J4001	QJAKJA008WJSA	J	Headphone Jack	AE
SC4001	QSOCNA523WJPZ	J	Socket, 13-pin	AD
RMC4001	RRMCUA034WJQZ	J	R/C, Receiver	AE

Downloaded from www.Manualslib.com manuals search engine

CABINET AND MECHANICAL PARTS
(LC-13B8U-S)

Ref. No.	Part No.	★	Description	Code
1	CCABAA938WJ01	J	Cabinet A Ass'y	BG
1-1	*Not Available*	–	Cabinet A	—
1-2	HDECQA346WJSA	J	R/C, LED Cover	AE
1-3	PSPAGA273WJZZ	J	SP Spacer(L), x4	AB
1-4	PSPAGA286WJZZ	J	SP Spacer(S), x4	AA
1-5	PSPAHA293WJZZ	J	Mask Spacer(S), x2	AB
1-6	PSPAHA304WJZZ	J	Mask Spacer(L), x2	AC
1-7	QCNW-D473WJQZ	J	Connecting Cord	AH
1-8	QEARZA075WJZZ	J	Grounding Part	AB
1-9	TLABZA459WJZZ	J	"POP" Label	AB
1-10	TLABZA635WJZZ	J	"Energy Star" Label	AC
1-11	VSP7040PB658S	J	Speaker, x2	AP
1-12	XEBSN30P08000	J	Screw, x6	AA
2	CCABBA579WJ02	J	Cabinet B Ass'y	BD
2-1	*Not Available*	–	Cabinet B	—
2-2	HiNDP5733CESB	J	"AQUOS" Label	AD
2-3	JBTN-A444WJKB	J	Operation Button	AF
2-4	JBTN-A456WJKB	J	Power Button	AD
2-5	LANGFA085WJFW	J	Kensington Angle	AC
2-6	LANGTA206WJFW	J	Reinforcement Angle	
2-7	MSPRCA015WJFW	J	Spring, for Power Button	AB
2-8	PCOVZA061WJZZ	J	Speaker Hole Cover, x1	AB
2-9	PMLT-A098WJZZ	J	Light Shielding Spacer, x2	AC
2-10	PSPAHA302WJZZ	J	Spacer, x1	AB
2-11	PSPAHA593WJZZ	J	Spacer, x4	AB
2-12	PZETKA126WJKZ	J	Insulating Spacer, x1	AD
2-13	XEBSN30P08000	J	Screw, x3	AA
3	CDAi-A206WJ02	J	Stand Ass'y	BD
3-1	GDAi-A206WJKB	J	Stand, Base	
3-2	GLEGGA014WJZZ	J	Rubber Leg, x6	AB
3-3	LANGHA004WJFW	J	Base Angle, x2	AE
3-4	MHNG-A114WJFW	J	Tilt Hinge	
3-5	XBBS940P16000	J	Screw, x4	AB
3-6	XEBS940P08000	J	Screw, x6	AB
4	*Not Available*	–	13" LCD Panel Unit Ass'y	—
4-1	RLCDTA023WJN1	J	13" LCD Panel Unit	CH
4-2	*Not Available*	–	Back Shield Ass'y	—
4-2-1	PSLDMA715WJFW	J	Back Shield	AW
4-2-2	LHLDZA429WJKZ	J	Lamp Holder(Bottom)-R	AF
4-2-3	LHLDZA435WJKZ	J	Lamp Holder(Bottom)-L	AF
4-2-4	PMLT-A149WJZZ	J	Light Shielding Spacer, x4	AB
4-2-5	PSHEPA229WJZZ	J	Reflection Sheet	AK
4-2-6	PSPAGA290WJZZ	J	Cushion Spacer, x2	AC
4-2-7	PSPAZA857WJN1	J	Spacer, x7	AC
4-2-8	PSPAGA297WJZZ	J	Spacer, x2	AB
4-2-9	PSPAHA455WJZZ	J	Light Shielding Spacer, x1	AA
4-2-10	PZETKA134WJKZ	J	Insulating Sheet, x1	AG
4-2-11	TCAUZA031WJZZ	J	Caution Label	AB
4-2-12	PSPAKA128WJKZ	J	Specer, x1	AC
⚠ 4-3	KLMP-A048WJZZ	J	Lamp Unit, x4	AV
4-4	LHLDZA433WJKZ	J	Lamp Holder(Top)-R	AH
4-5	LHLDZA434WJKZ	J	Lamp Holder(Top)-L	AH
4-6	LX-BZA084WJF7	J	Screw, x4	AA
4-7	PCOVUA047WJN1	J	Diffusion Plate	AS
4-8	PSHEPA230WJZZ	J	Diffusion Sheet, x2	AH
4-9	PSPAHA302WJZZ	J	Light Shielding Spacer, x2	AB
4-10	QCNW-D900WJQZ	J	Connecting Cord	AE
4-11	QCNW-D901WJQZ	J	Connecting Cord	AF
4-12	QCNW-D902WJQZ	J	Connecting Cord	AG
5	GCOVAB082WJKA	J	Stand Cover	AK
6	GCOVAB247WJKA	J	Terminal Cover	AK
7	GCOVAB252WJKA	J	Bass-Conne Cover	AE
8	HiNDPB304WJSA	J	Model Label	AG
9	JHNDPA017WJKA	J	Carrying Handle	AL
10	LHLDZA251WJN1	J	Power Button Holder	AD
11	*Not Available*	–	Serial No. Label	—
12	LCHSMA202WJN1	J	Chassis Frame	AM
13	PZETKA135WJKZ	J	Insulating Sheet	AH
14	QCNW-D742WJQZ	J	Connecting Cord	AG
15	LX-BZ3442CEF9	J	Screw, x4	AB
16	XBBS930P05000	J	Screw, x2	AA
17	XBBS940P10000	J	Screw, x5	AB
18	XBPS730P06JS0	J	Screw, x7	AA
19	XEBS930P14000	J	Screw, x8	AA
20	XEBSN30P08000	J	Screw, x7	AA
21	XEBS930P08000	J	Screw, x3	AA

Downloaded from www.Manualslib.com manuals search engine

CABINET AND MECHANICAL PARTS (LC-13B8U-S)

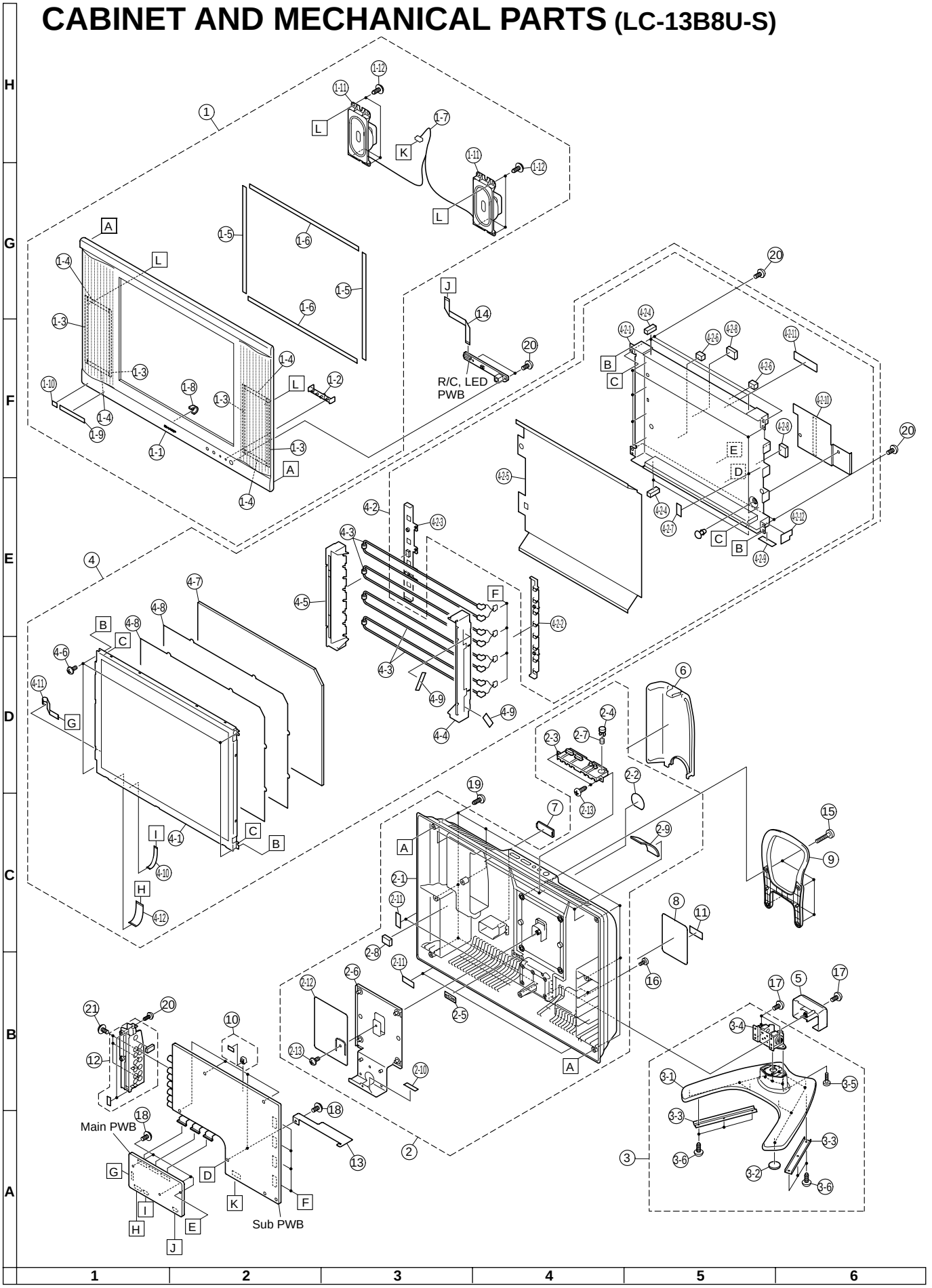

Downloaded from www.Manualslib.com manuals search engine

CABINET AND MECHANICAL PARTS
(LC-15B8U-S, LC-15B9U-SM)

Ref. No.	Part No.	★	Description	Code
1	CCABAA939WJ05	X	Cabinet A Ass'y (LC-15B8U-S)	BH
1	CCABAA939WJ04	X	Cabinet A Ass'y (LC-15B9U-SM)	BK
1-1	*Not Available*	–	Cabinet A	—
1-2	HDECQA346WJN1	J	R/C, LED Cover	AE
1-3	PSPAGA272WJZZ	X	SP Spacer(S), x2	
1-4	PSPAGA273WJZZ	X	SP Spacer(L), x4	
1-5	PSPAHA291WJZZ	J	Mask Spacer(L), x2	AC
1-6	PSPAHA292WJZZ	J	Mask Spacer(S), x2	AC
1-7	TLABZA459WJZZ	J	POP Label	AB
1-8	TLABZA635WJZZ	J	"EnergyStar" Label	AC
2	CCABBA580WJ03	X	Cabinet B Ass'y	BK
2-1	*Not Available*	–	Cabinet B	—
2-2	CBTN-A444WJ02	X	Operation Button Ass'y	AM
2-2-1	*Not Available*	–	Operation Button	—
2-2-2	JBTN-A456WJKB	X	Power Button	
2-2-3	MSPRCA015WJFW	J	Spring, for Power Button	AB
2-3	HiNDP5733CESB	J	"AQUOS" Label	AD
2-4	HiNDPB413WJSA	X	Terminal Indication Label	AH
2-5	LANGFA085WJFW	J	Kensington Angle	AC
2-6	LANGTA207WJFW	X	Reinforcement Angle	AS
2-7	LHLDWA055WJKZ	J	AC Cord Holder	AC
2-8	PCOVZA061WJZZ	X	Speaker Hole Cover, x1	
2-9	PMLT-A098WJZZ	J	Light Shielding Spacer, x1	AC
2-10	PZETKA126WJKZ	X	Insulating Spacer, x1	
2-11	XEBSN30P08000	J	Screw, x3	AA
2-12	PSPAHA628WJZZ	X	Himelon Spacer, x1	
3	CDAi-A206WJ01	X	Stand Ass'y (LC-15B9U-SM)	BK
3	CDAi-A206WJ02	X	Stand Ass'y (LC-15B8U-S)	
3-1	GDAi-A206WJKA	X	Stand, Base (LC-15B9U-SM)	
3-1	GDAi-A206WJKB	X	Stand, Base (LC-15B8U-S)	
3-2	GLEGGA014WJZZ	J	Rubber Leg, x6	AB
3-3	LANGHA004WJFW	J	Reinforcement Angle	AE
3-4	MHNG-A114WJFW	X	Tilt Hinge	
3-5	XBBS940P16000	J	Screw, x4	AB
3-6	XEBS940P08000	J	Screw, x6	AB
4	*Not Available*	–	15" LCD Panel Unit Ass'y	—
4-1	RLCDTA024WJN1	J	15" LCD Panel Unit	CN
4-2	*Not Available*	–	Back Shield Ass'y	—
4-2-1	PSLDMA716WJFW	J	Back Shield	AX
4-2-2	LHLDZA425WJKZ	J	Lamp Holder(Bottom)-R	AF
4-2-3	LHLDZA426WJKZ	J	Lamp Holder(Bottom)-L	AF
4-2-4	PMLT-A231WJZZ	J	Light Shielding Spacer, x4	
4-2-5	PSHEPA228WJZZ	J	Reflection Sheet	AL
4-2-6	PSPAGA290WJZZ	J	PWB Spacer, x3	AC
4-2-7	PZETKA134WJKZ	J	Insulating Sheet, x1	AG
4-2-8	TCAUZA031WJZZ	J	Caution Label	AB
4-2-9	LHLDW1173CEZZ	J	Wire Holder, x1	AD
⚠ 4-3	KLMP-A047WJZZ	J	Lamp Unit, x4	AV
4-4	LHLDZA423WJKZ	J	Lamp Holder(Top)-L	AK
4-5	LHLDZA424WJKZ	J	Lamp Holder(Top)-R	AH
4-6	LX-BZA084WJF7	J	Screw, x4	AA
4-7	PCOVUA046WJN1	J	Diffusion Plate	
4-8	PSHEPA227WJZZ	J	Diffusion Sheet, x2	AK
4-9	PSPAKA045WJZZ	J	Insulating Sheet, x1	AB
5	GCOVAB082WJKA	J	Stand Cover (LC-15B8U-S)	AK
5	GCOVAB082WJKB	J	Stand Cover (LC-15B9U-SM)	AK
6	GCOVAB248WJKA	X	Terminal Cover	AM
7	GCOVAB249WJKA	X	Bass-Conne Cover	AH
8	HiNDPB447WJSA	X	Model Label (LC-15B9U-SM)	AH
8	HiNDPB448WJSA	X	Model Label (LC-15B8U-S)	AH
9	JHNDPA017WJKA	J	Carrying Handle	AL
10	LHLDZA251WJKZ	J	Power Button Holder	AD
11	*Not Available*	–	Serial No. Label	—
12	LCHSMA203WJKA	X	Chassis Frame	AN
13	PZETKA135WJKZ	X	Insulating Sheet, x1	AC
14	QCNW-D468WJQZ	X	Connecting Cord	AG
15	QCNW-D738WJQZ	X	Connecting Cord	AH
16	QCNW-D897WJQZ	X	Connecting Cord	AF
17	QCNW-D898WJQZ	X	Connecting Cord	AG
18	QCNW-D899WJQZ	X	Connecting Cord	AH
19	VSP7040PB658S	J	Speaker, x2	AP
20	LX-BZ3442CEF9	J	Screw, x4	AB
21	PSPAGA272WJZZ	X	SP Spacer(S), x2	AB
22	XBBS930P05000	J	Screw, x4	AA
23	XBBS940P08000	J	Screw, x1	AB
24	XBBS940P16000	J	Screw, x4	AB
25	XBPS730P06JS0	J	Screw, x7	AA
26	XEBS930P14000	J	Screw, x7	AA
27	XEBSN30P08000	J	Screw, x12	AA
28	XEBS930P08000	J	Screw, x3	AA
29	PSPAHA629WJZZ	X	Himelon Spacer, x1	

Downloaded from www.Manualslib.com manuals search engine

CABINET AND MECHANICAL PARTS (LC-15B8U-S, LC-15B9U-SM)

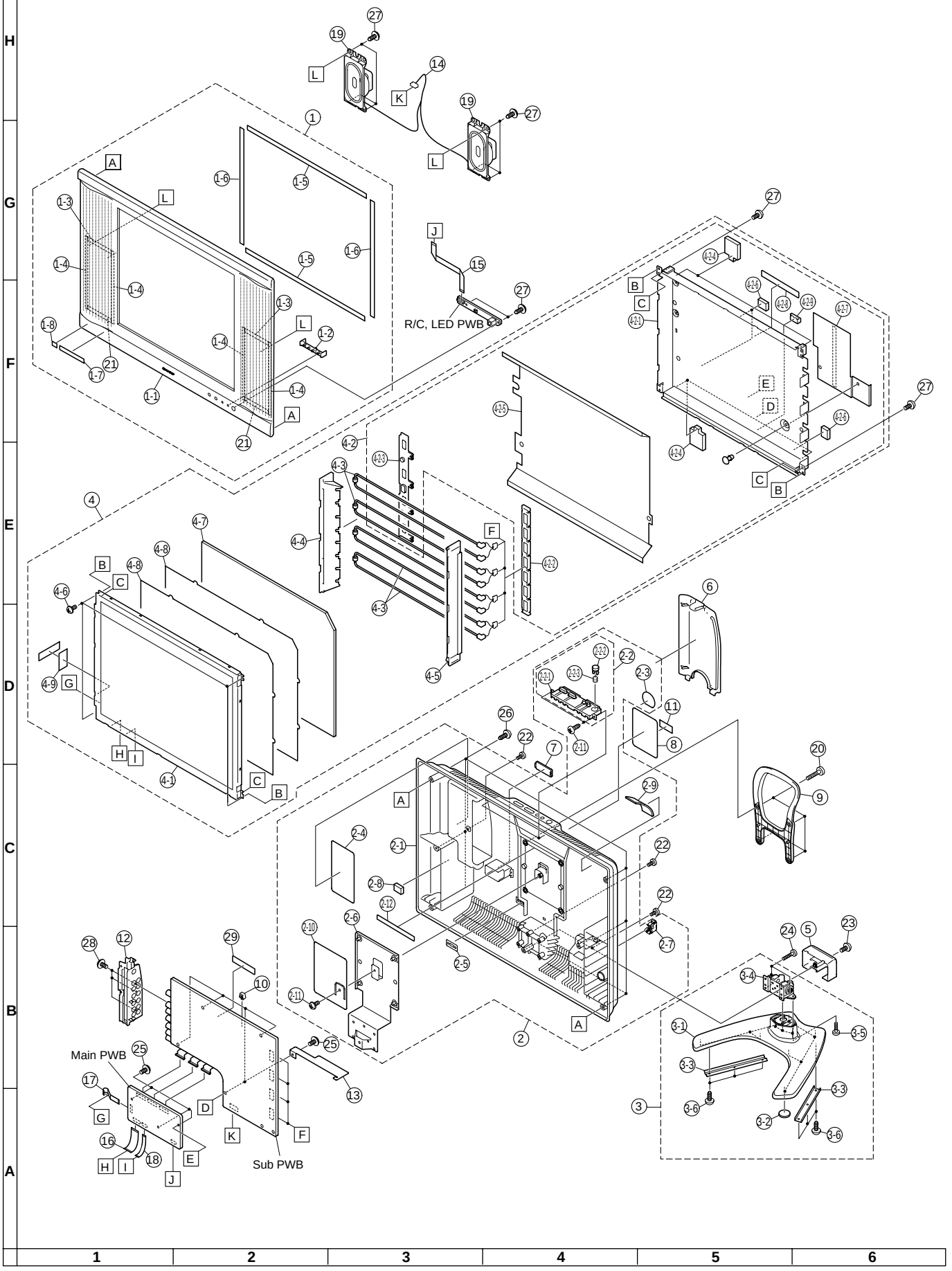

Downloaded from www.Manualslib.com manuals search engine

SUPPLIED ACCESORIES

Ref. No.	Part No.	★	Description	Code
X1	LHLDWA002WJSA	J	Cable Clamp, x1 (LC-13B8U-S, LC-15B8U-S)	AD
X1	LHLDWA002WJSB	J	Cable Clamp, x1 (LC-15B9U-SM)	AD
⚠ X2	QACCDA038WJPZ	J	AC Cord (LC-15B8U-S, LC-15B9U-SM)	AL
⚠ X2	QACCDA041WJPZ	J	AC Cord (LC-13B8U-S)	AL
X3	RRMCGA293WJSA	J	Wireless Remote Control (LC-13B8U-S, LC-15B8U-S)	AT
X3	RRMCGA293WJSB	J	Wireless Remote Control (LC-15B9U-SM)	AT
X4	TCADEA028WJN1	J	Questionnaire Card (LC-13B8U-S)	AD
X4	TCADEA126WJZZ	X	Questionnaire Card (LC-15B8U-S, LC-15B9U-SM)	AC
X5	TiNS-B739WJN1	X	Operation Manual (LC-15B9U-SM)	AY
X5	TiNS-B740WJN1	X	Operation Manual (LC-15B8U-S)	AY
X5	TiNS-B779WJZZ	J	Operation Manual (LC-13B8U-S)	AR
X6	*Not Available*	–	"AAA" size Battery, x2	—

SERVICE JIGS
(USE FOR SERVICING)

Ref. No.	Part No.	★	Description	Code
	QCNW-A555WJZZ	J	Extension Cable 20-pin (SC803-LCD)	AU
	QCNW-A556WJZZ	J	Extension Cable 50-pin (SC801-LCD)	AU
	QCNW-B784WJZZ	J	Extension Cable 30-pin (SC802-LCD)	BA
	QCNW-C461WJQZ	J	Extension Cable 15-pin,x3 (SC2001-P3401) (SC2002-P3403) (SC2003-P3404)	CD

PACKING PARTS
(NOT REPLACEMENT ITEM)

LC-13B8U-S

Ref. No.	Part No.	★	Description	Code
S1	SPAKCB954WJZZ	–	Packing Case	—
S2	SPAKFA402WJZZ	–	Packing Material	—
S3	SPAKPA535WJZZ	–	Wrapping Paper	—
S4	SPAKXA762WJZZ	–	Buffer Material	—
S5	SSAKA0170CEZZ	–	Polyethylene Bag	—
S6	SSAKA0219CEZZ	–	Polyethylene Bag	—
S7	TLABK0001TAZZ	–	No. Label	—

LC-15B8U-S, LC-15B9U-SM

Ref. No.	Part No.	★	Description	Code
S1	SPAKCB956WJZZ	–	Packing Case (LC-15B9U-SM)	—
S1	SPAKCB957WJZZ	–	Packing Case (LC-15B8U-S)	—
S2	SPAKPA534WJZZ	–	Wrapping Paper	—
S3	SPAKXA763WJZZ	–	Buffer Material	—
S4	SSAKA0101GJZZ	–	Polyethylene Bag	—
S5	TLABKA009WJZZ	–	No. Label	—

Accessories

Wireless remote control	AC cord
X3	X2

"AAA" size batteries (×2)	Cable clamp	Operation manual
X6 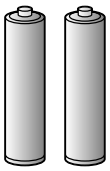	X1	X5 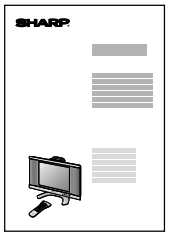

Downloaded from www.Manualslib.com manuals search engine

PACKING OF THE SET

■LC-15B8U-S
LC-15B9U-SM

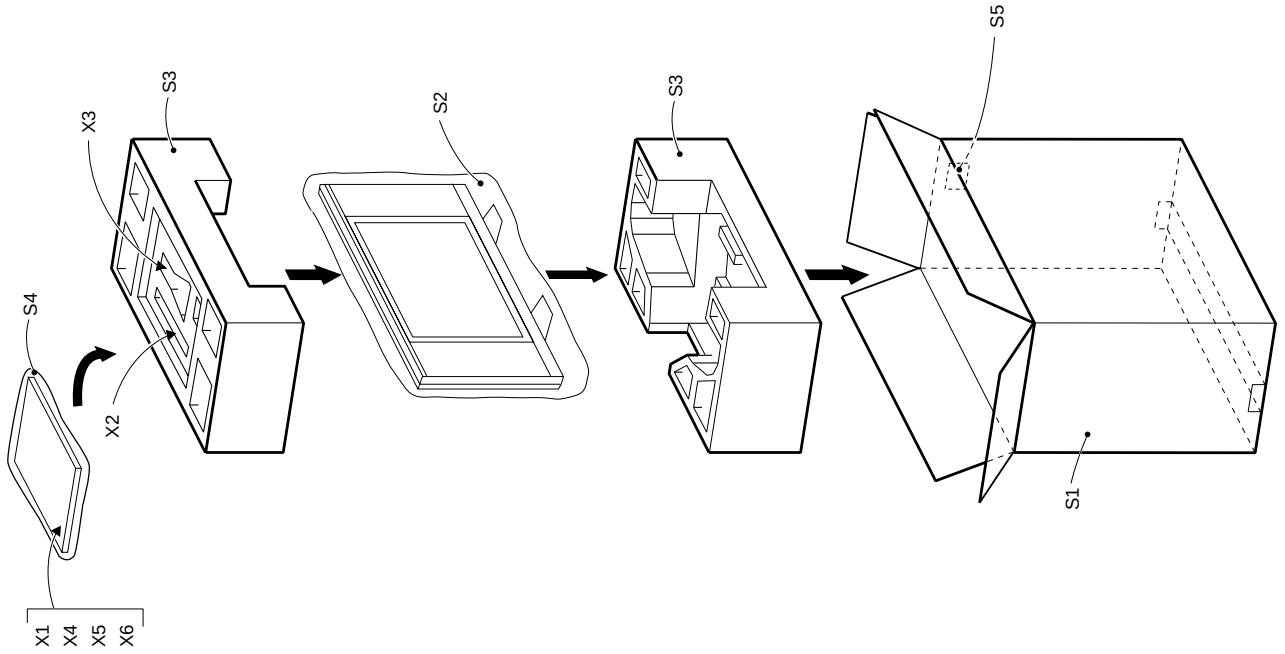

■LC-13B8U-S

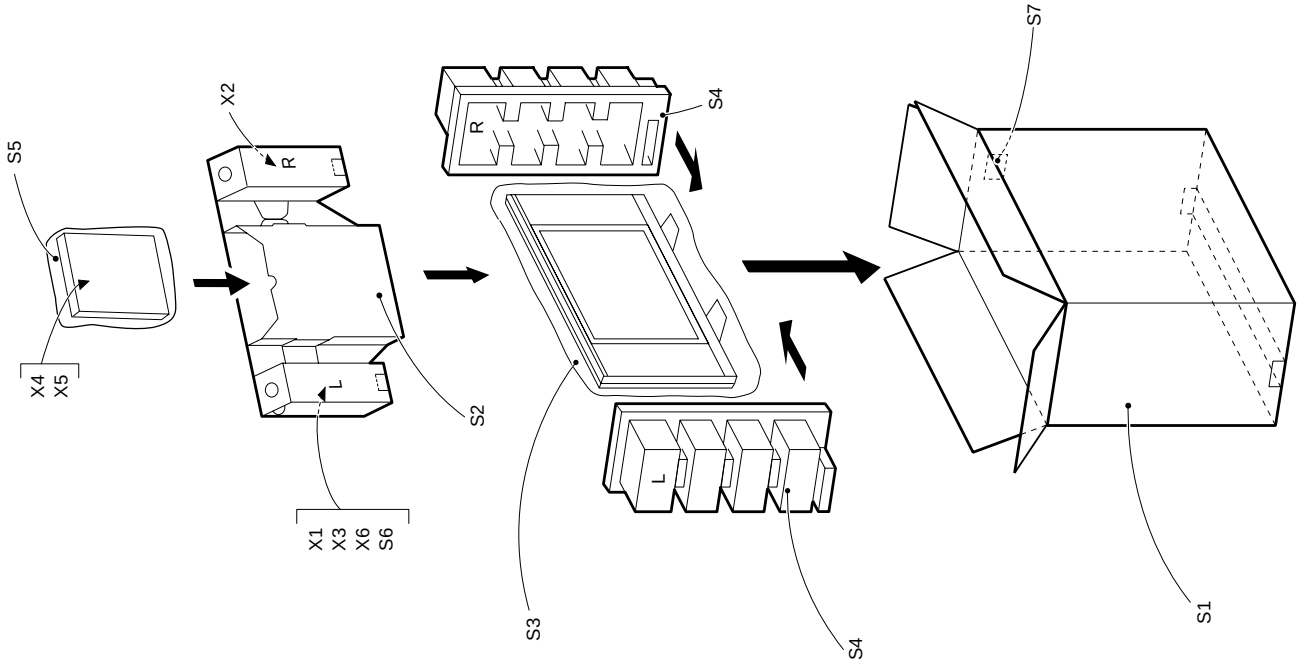

Downloaded from www.Manualslib.com manuals search engine

SHARP

COPYRIGHT © 2005 BY SHARP CORPORATION

ALL RIGHTS RESERVED.

No part of this publication may be reproduced,
stored in a retrieval system, or transmitted in
any form or by any means, electronic, mechanical,
photocopying, recording, or otherwise, without
prior written permission of the publisher.

TQ1909-S
Jul. 2005 Printed in Japan

Design and Production Information	
Design	: Japan
Production	: Japan, SEMEX

MI. KG

SHARP CORPORATION
AV Systems Group
Quality & Reliability Control Center
Yaita, Tochigi 329-2193, Japan

Downloaded from www.Manualslib.com manuals search engine